THOMSON 21MG18

MODEL

SERVICE MANUAL

LOCATION OF CONTROLS - EMPLACEMENT DES REGLAGES - SERVICE LAGEPLAN
POSIZIONE REGOLATORI DI SERVIZIO - SITUACIÓN DE LOS AJUSTES

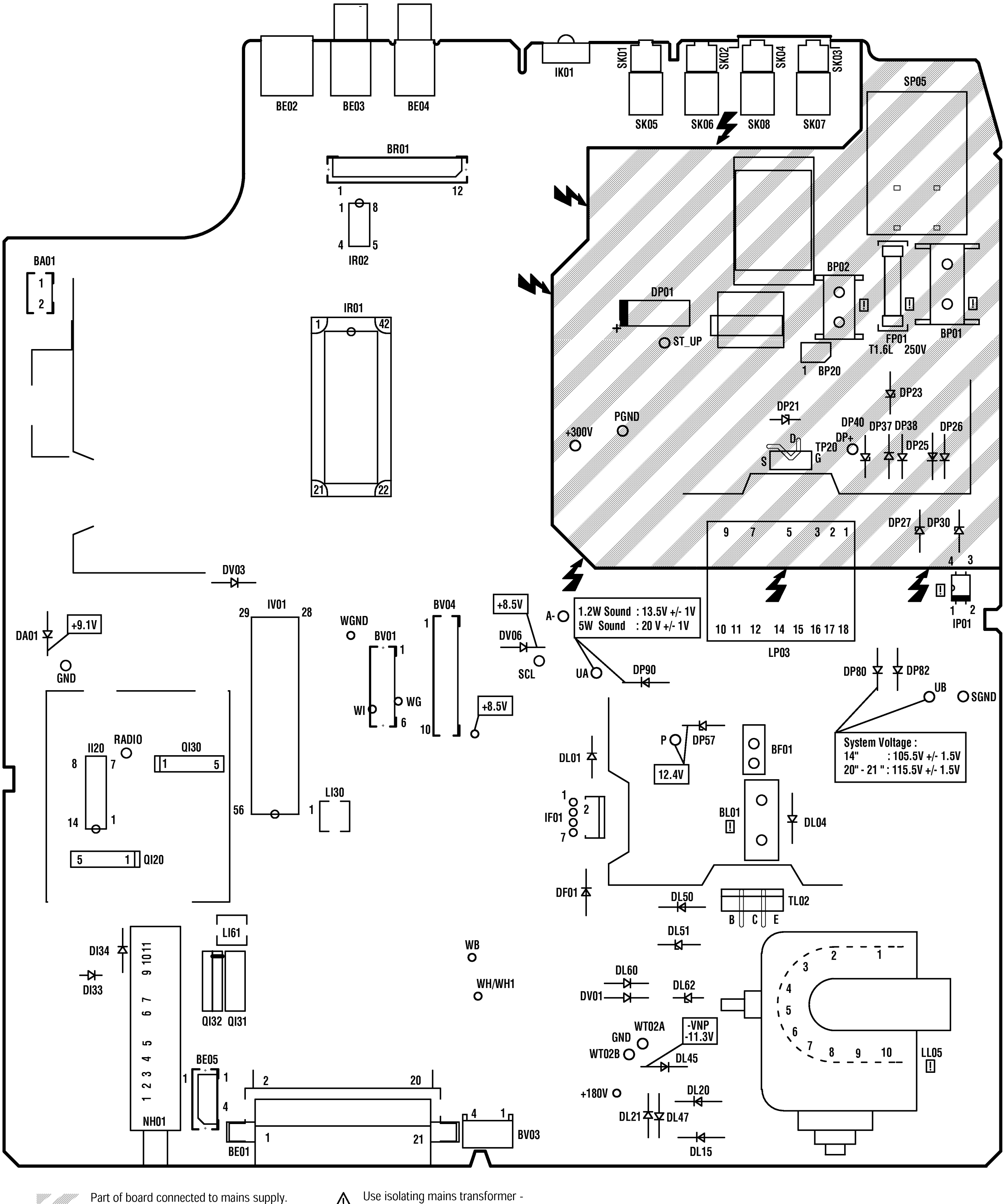

Part of board connected to mains supply.
Partie du châssis reliée au secteur.
Primärseite des Netzteils.
Parte dello châssis collegata alla rete.
Parte del chasis conectada a la red.

⚠ Use isolating mains transformer -
Utiliser un transformateur isolateur du secteur -
Trenntrafo verwenden -
Utilizar un transformador aislador de red -
Utilizzare un transformatore per isolarvi dalla rete

ADJUSTMENTS - REGLAGES - EINSTELLUNGEN - REGOLAZIONE - AJUSTES

U G2 / cutoff	SCREEN	Peak white pattern. = 50%	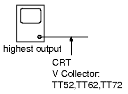	Adjust Screen voltage VG2 120V +/- 5V: 14" 145V +/- 5V : 20" & 21" 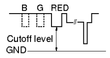
FOCUS	LL05	Contrast = 100% Brightness = 0% Test pattern (standard values)		Sharp picture
(MAIN) **SYSTEM VOLTAGE** **+UB**	-	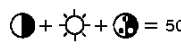 = 50% Colour-Bar Test pattern W = 100% Mire de barres couleur blanc = 100% Farbbalken W = 100% Monoscopio delle barre colorate bianco = 100% Mira en color blanco = 100% AV1	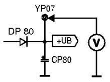	14" : 105 V +/- 1.5V 20" - 21" : 115.5 V +/- 1.5V

SERVICE-MODE (GB)

It is necessary to enter the Service Mode in order to carry out alignment of the TV set. Most adjustments can be made with the RCU, except the Focus and Screen voltages.

1. Service Mode Access

1.1 With the RCU, switch the TV set into the "**Standby**" mode.
1.2 Switch "**Off**" the TV set by mains supply switch (wait until LED is dark).
1.3 Whilst pressing the "**Magenta** (text)" button on the RCU switch "**On**" the TV set using the mains switch.
Continue to press the "**Magenta** (text)" button until the Service-setup Sub-menu appears.

```
VT01
1BIL   2BD   3B    4I    5DI   >1
FFI                            OFF
```

Important : The Service Mode cannot be entered if any equipment is connected to the Scart socket, i.e. pin 8 switching voltage present.

2. Service Menu

2.1 Navigation

- Press the ▲ / ▼ buttons to select the menu line.
- Press the ◀/▶ buttons to make adjustments or selection of a menu item.

2.2 Service Sub-Menus

• Service Set-up Sub-menu - IF Sub-menu - Video Sub-menu Geometry Sub-menu - Hotel Menu

2.3 Activation of Service Sub-Menu

To navigate around the Service sub-menu, press the "**Magenta**" button on the RCU, to step through the sub-menus in the following order:
... No Menu ⇨ Service Set-up Sub-Menu ⇨ Service IF Sub-Menu ⇨ Service Geometry Sub-Menu ⇨ Service Video Sub-Menu ⇨ Hotel Menu ⇨ No Menu ⇨ Service Set-up Sub-Menu ...etc.

3. Alignment and storing new function value

3.1 The current value of the selected function is displayed in a hexadecimal form to the right of the function name. This value is adjusted by means of the RCU ◀/▶ buttons.
3.2 To "**STORE**" the functions new value whilst in any of the Service Sub-menus, press the "**OK**" button on the RCU.
3.3 To leave the Service Sub-menu press the "**Exit**" button on the RCU.

4. Temporary exit from Service Mode

4.1 To temporary leave the Service Mode, press the "**Exit**" button on the RCU. To access the everyday menus, press the "**Menu**" button on the RCU.
4.2 To return to the Service Mode,press the "**Magenta**" button on the RCU

5. Leaving the Service Mode

5.1 To leave the Service mode either, switch the TV set into "**Standby**" or switch "**Off**" the mains supply.

MODE SERVICE (F)

Le mode service sert au réglage de l'appareil. Toutes les opérations de réglage s'effectuent à l'aide de la télécommande (sauf les réglages de Focus et de tension de grille-écran).

1. Accès au mode service

1.1 Commuter le téléviseur en position de veille avec la télécommande.
1.2 Eteindre le téléviseur par l'interrupteur secteur (attendre l'extinction complète du voyant).
1.3 Maintenir la touche "**Magenta** (text)" enfoncée et mettre simultanément le téléviseur en marche avec l'interrupteur secteur. Ne pas relacher la touche "**Magenta** (text)" jusqu'à apparition du sous-menu de Service Setup.

```
VT01
1BIL   2BD   3B    4I    5DI   >1
FFI                            OFF
```

Attention : Le mode service n'est pas accessible si un appareil est connecté à la prise péritélévision.

2. Menu Service

2.1 Déplacement

- Appuyer sur la touche ▲ / ▼ pour sélectionner une ligne de menu.
- Appuyer sur la touche ◀/▶ pour un réglage ou une sélection d'une option.

2.2 Sous-Menus du mode service

• Sous- Menu Setup - Sous- Menu FI - Sous- Menu Video - Sous- Menu Geometrie - Menu Hotel

2.3 Sélection d'un Sous-Menu

En mode service des courtes pressions sur la touche "**Magenta**" permet la sélection d'un sous- menu dans l'ordre suivant :
... Pas de Menu ⇨ Sous-menu Setup ⇨ Sous-menu FI ⇨ Sous-menu Géométrie ⇨ Sous-menu Video ⇨ Hotel Menu ⇨ Pas de Menu ⇨ Sous-menu Setup ...

3. Réglage des fonctions sélectionnées; mémorisation

3.1 La valeur momentanée de la fonction sélectionnée est indiquée sous forme hexadécimale à droite, à coté de la position à régler et peut être modifiée avec la télécommande par la touche ◀/▶ .
3.2 Dans un sous-menu (Service Setup / FI / Geometrie / Video) appuyer sur la touche "**OK**" pour mémoriser la nouvelle valeur de réglage en NVM (EEPROM).
3.3 Appuyer sur la touche "**Exit**" pour sortir d'un sous-menu.

4. Sortie temporaire du mode service

4.1 Utiliser la touche "**Exit**" de la télécommande.
Le menu utilisateur peut-être accesible via la touche "**Menu**".
4.2 Pour entrer à nouveau dans le Menu Setup utiliser la touche magenta.

5. Sortie du mode service

5.1 Pour sortir du mode service, commuter le téléviseur en position de veille ou le mettre hors service par l'interrupteur secteur.

SERVICE-MODE (D)

Der Service-Mode wird für den Geräteabgleich benötigt. Alle Einstellungen erfolgen mit der Fernbedienung (bis auf Fokuseinstellung und Schirmgitterspannung).

1.Service-Mode einschalten

1.1 Mit der Fernbedienung das Fernsehgerät in Stand-by schalten.
1.2 Das Gerät mit dem Netzschalter ausschalten (warten bis LED dunkel ist)
1.3 Während Sie die margentafarbene Taste **(text)** auf der Fernbedienung gedrückt halten, schalten Sie das Gerät mit dem Netzschalter ein. Halten Sie die margentafarbene Taste solange gedrückt bis das Service Setup Sub-Menü erscheint.

```
VT01
1BIL   2BD   3B    4I    5DI   >1
FFI                            OFF
```

Achtung : Der Service-Mode läßt sich nicht einschalten, wenn an einer Euro-AV-Buchse ein Gerät aktiviert ist, d.h. die Schaltspannung anliegt.

2. Service Menü

2.1 Navigation

-Drücken Sie die Tasten ▲ / ▼ zum Auswählen der Menüzeile.
-Drücken Sie die Tasten ◀/▶ zum Einstellen oder Auswählen in einer Menüzeile

2.2 Service Sub-Menü

• Service Setup Sub-Menü , ZF Sub-Menü , Video Sub-Menü, Geometrie Sub-Menü - Hotel Menü

2.3 Service Sub-Menü aktivieren

Durch einen jeweils kurzen Druck auf die margentafarbene Taste wird das Service Menü in der folgenden Reinhenfolge aktiviert :
... Kein Menü ⇨ Service Setup Sub-Menü ⇨ Service ZF Sub-Menü ⇨ Service Geometrie Sub-Menü ⇨ Service Video Sub-Menü ⇨ Hotel Menü ⇨ kein Menü ⇨ Service Setup Sub-Menü ...

3. Abgleich der gewählten Funktion und Speichern

3.1 Der momentane Wert der gewählten Funktion wird hexadezimal rechts neben der abzugleichenden Position angegeben und kann mit der Taste ◀/▶ auf der Fernbedienung verändert werden.
3.2 In den Service Sub-Menüs drücken Sie OK um die neuen Funktionswerte im NVM (EEPROM) zu speichern.
3.3 Drücken Sie "**Exit**" zum Verlassen eines Service Sub-Menüs.

4. Vorübergehendes verlassen des Service-Mode

4.1 Auf der Fernbedienung Exit drüken.
Mit der Taste Menü gelangen Sie zum Menü Übersicht.
4.2 Durch Drücken der margentafarbenen Taste gelangen Sie in das Service Setup Sub-Menü.

5. Service-Mode verlassen

5.1 Zum Verlassen des Service-Mode das Gerät in Stand By schalten oder mit dem Netzschalter ausschalten.

MODO SERVICIO (E)

Se necesita el MODO SERVICIO para ajustar el aparato. Todos los ajustes se hacen con el mando a distancia (a excepción de la tensión del sistema, los ajustes del foco y las tensiones de la rejilla de pantalla).

1. Ajustar el Modo Servicio

1.1 Con el mando a distancia conectar a STANDBY el televisor.
1.2 Desconectar el aparato con el interruptor de la red (esperar hasta que el LED se apague).
1.3 Mientras mantiene pulsado el botón "**Magenta** (texto)" de la UCR, pulse el interruptor de paso de la corriente "On" para encender el televisor. Mantenga pulsado el botón "**Magenta** (texto)" hasta que aparezca el submenú de la configuración del servicio.

```
VT01
1BIL   2BD   3B    4I    5DI   >1
FFI                            OFF
```

Atencion : No se puede conectar el MODO SERVICIO cuando en Eurotoma-AV está activado un aparato, es decir, cuando existe tensión de conexión.

2. Menú Servicio.

2.1 Desplazamiento
- Pulse el botón ▲ / ▼ para seleccionar la línea del menú.
- Pulse el botón ◀/▶ para ajustar o seleccionar una opción del menú.

2.2 Submenú Servicio
• Service Setup Sub-menu - IF Sub-menu - Video Sub-menu Geometry Sub-menu - Hotel Menu 2.3 Activación del submenú Servicio

2.3 Activación del submenú Servicio

Al pulsar brevemente el botón "**Magenta**" en el modo Servicio, activará el menú Servicio en la secuencia siguiente:
... No Menu ⇨ Service Setup Sub-Menu ⇨ Service IF Sub-Menu ⇨ Service Geometry Sub-Menu ⇨ Service Video Sub-Menu ⇨ Hotel Menu

3. Ajuste de la función elegida y almacenamiento

3.1 El valor momentáneo de la función elegida es indicado de modo hexadecimal a la derecha, al lado de la posición a ajustar, y puede cambiarse con la tecla ◀ o bien ▶ en el mando a distancia.
3.2En el submenú Servicio, es decir, Configuración del servicio/IF/Geometría/Submenú Vídeo pulse "**OK**" para ALMACENAR el nuevo valor de las funciones en NVM (EEPROM).
3.3 Pulse el botón "**Exit**" para salir de cualquier submenú Servicio.

4. Salida temporal del Modo Servicio

4.1 Pulse Salir en el mando a distancia.
Con el botón Menu puede acceder aml menú de uso cotidiano.
4.2 Puede acceder al submenú de configuración del servicio mediante el botón "**Magenta**".

5. Salir del Modo Servicio

5.1 Conmute el aparato a STANDBY a fin de salir del MODO SERVICIO o desconectar con el interruptor de la red.

SERVICE-MODE (I)

Il Service-Mode è necessario per l'allineamento dell'apparecchio. Tutte le regolazioni si effettuano con il telecomando. (a parte le regolazione del fuoco e le tensioni della griglia schermo).

1. Attivazione del Service-Mode

1.1 Commutare il televisore in stand-by con il telecomando.
1.2 Spegnere l'apparecchio con l'interruttore di rete (attendere finchè il LED è spento)
1.3 Mentre tenete premuto il pulsante "**Magenta** (testo)" dell' RCU, accendete il televisore utilizzando l'interrutto di rete. Continuate a premere il pulsante "**Magenta** (testo)" dell' RCU fino all'apparizione del Service Setup Sub Menu

```
VT01
1BIL   2BD   3B    4I    5DI   >1
FFI                            OFF
```

Attenzione : Il Service-Mode non si può attivare se è attivato un apparecchio collegato alla presa di peritelevisione AV, cioè se è presente la tensione ausiliaria.

2. Service Menu

2.1 Navigazione

- Premere i tasti ▲ / ▼ per selezionare la linea del menu
- Premere i tasti ◀/▶ per la regolazione o la selezionz di un elemento del menu

2.2 Services Sub-Menu

• Service Setup Sub-menu - IF Sub-menu - Video Sub-menu Geometry Sub-menu - Hotel Menu

2.3 Activazione del Service Sub-Menu

Nel Service Mode, una breve pressione sul tasto "**Magenta**" attiverà il Service Menu secondo questa sequenza:
... No Menu ⇨ Service Setup Sub-Menu ⇨ Service IF Sub-Menu ⇨ Service Geometry Sub-Menu ⇨ Service Video Sub-Menu ⇨ Hotel Menu ⇨ No Menu ⇨ Service Setup Sub-Menu ...

3. Taratura della funzione scelta e memorizzazione

3.1 Il valore momentaneo della funzione scelta viene indicato in formato esadecimale a destra, accanto alla posizione da allineare e può essere cambiato con il pulsante ◀/▶ del telecomando.
3.2 Nel Service Sub Menu (cioè Service Setup / IF /Geometry /Video Sub Menu), premere "**Ok**" per MEMORIZZARE i nuovi valori delle funzioni in NVM (EEPROM).
3.3 Premere il tasto "**Exit**" per uscire da qualsiasi Service Sub Menu.

4. Uscita temporanea dal Service Mode

4.1 Premere Exit sul telecomando.
Al menu di uso quotidiano si accede attraverso il pulsante Menu.
4.2 Il Service Setup Sub Menu è accessibile attraverso il tasto "**Magenta**".

5. Disattivazione del Service-Mode

5.1 Per disattivare il ServiceMode, commutare l'apparecchio in stand-by o spegnerlo con l'interruttore di rete.

ALIGNEMENT PROCEDURE - PROCESSUS DE REGLAGES - ABGLEICH - VISUALIZZAZIONE DEL VALORE DELLA REGOLAZIONE - PROCEDIMIENTO DE ALINEACION

CHASSIS TX807 VST - VOLTAGE SYNTHESIS - SYNTHESE DE TENSION - SPANNUNGSSYNTHESE - SINTESI DI TENSIONE - SINTESIS DE TENSION

SET-UP SUB-MENU

```
VN01
1BIL  2BD  3B  4I  5DI  >1
FFI                  OFF
```

IF SUB-MENU

```
AFC                 < x   >
IFPL   00 - 7F         68
L'FA   00 - 7F         75
AGC    00 - 3F         19
```

GEOMETRY SUB-MENU

```
HSH    00 - 3F         45
VA50   00 - 3F         20
VA60   00 - 3F         36
VSH    00 - 3F         59
```

Test Bar pattern used : 4/3 with a geometric circle.
Mire utilisée : 4/3 avec un cercle de géométrie.
Benötigtes Testbid : 4/3 mit geometrischem Kreis.
Formato Testo utilizzato :4/3 con cerchio geometrico
Mira utilizada : 4/3 con circulo geometrico

VIDEO SUB-MENU

```
RED    00 - 3F         45
GRN    00 - 3F         20
BLU    00 - 3F         36
PEAK              <-    +>
```

Perform the G2 and the Focus settings beforehand.
Effectuez au préalable les réglages de G2 et de focus.
Stellen Sie zuvor G2 und "Focus" ein.
Effetuare le regolazioni G2 e del Fuoco innanzitutto.
Efectuar previamente los ajustes de G2 y Foco.

HOTEL MENU

```
HOTEL      ON
MAX   ............ I ...............
```

SET-UP

FT01
1st menu line :
1ère ligne du menu :
Menüzeile :
1° riga menu :
1ª línea del menú :
} **Software code**

Code	Norm	Teletext IC
VN01	BG/I/LL' BG/DKK' I,DK/I,BG	12k ROM VST - No Text. Europe market
VN02	BG/DKK'	12k ROM VST - No Text. Asia market
VT01	BG/I/LL' BG/DKK' I,DK/I,BG	16k ROM VST - ST text. Europe market
VT02	BG/DKK'	16k ROM VST - ST text. Asia market
VP01	BG/DKK' I,DK,I,BG	16k ROM VST - Philips text. Eastern Europe market
VP01	BG/DKK' I,DK,I,BG	16k ROM VST - Greek text. Europe market

1BIL 2BD 3B 4I 5DI 1
Standard

1	**BIL**	BG / I / LL'
2	**BD**	BG / DKK'
3	**B**	BG
4	**I**	I
5	**DI**	DK / I

ROM Defaut Value :
TX 807 Europe : 1BIL

FFI - For TX807 Asia only.
TX807 Europe : FFI = Off

IF

AFC
AFC Status display - Visualise l'état de AFC
AFC Status Display - Stato display AFC
Estado del CAF .

Display	AFC Status
< x . > x< . >	Fosc. too low
< . x> < . >x	Fosc. too high

IFPL — **IF PLL** adj.
VCO - 38.9MHz

L'FA — **IF PLL** adjustment chassis (LL')
VCO 33.9MHz

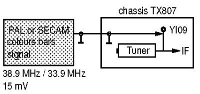

I - **IFPL**
Signal : PAL BG or SECAM L : 38.9 MHz / 15mV
- TV : Norm BG or L : Program Menu

```
◄ EURO   FR   UK ►
VL  ──────┼──────
```

EURO : norm BG
FR : norm LL'

II - **L'FA** (For BGHILL' set)
Signal : SECAM L' : 33.9 MHz / 15mV
- TV : Norm L' : Program Menu

- Adjust IFPL (or L'FA) until the indicator (x) is within the brackets : **< x .>**.

- Régler IFPL ou L'FA pour que le curseur (x) soit dans la fenêtre AFC : **< x .>**.

- IFPL (oder L'FA) einstellen wenn der indikator (x) innerhalb der Klammern ist : **< x .>** .

- Regolare IFPL (o L'FA) in modo che l'indicatore (x) rimanga all'interno delle parentesi : **< x .>**.

- Ajustar IFPL (o L'FA) hasta que el cursor (x) esté entre los símbolos : **< x .>**.

ROM Defaut Value : IFPL : 3F - L'FA : 3F

AGC
- Minimum noise- Minimum de bruit
- Geräuschminimum - Rumore minimo
- Minimo ruido

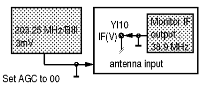

- Set AGC to 00
- Adjust AGC for maximum gain of IF signal.

ROM Defaut Value : AGC : 1F

GEOM

HSH		
VA 50		50 Hz
VA 60		60 Hz
VSH		

ROM Defaut Value :
HSH : 20
VA 50 : 18
VA 60 : 20
VSH : 1A

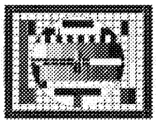

overscan V=107%

VIDEO

RED*	= 50% Grey scale test pattern white=100% weiβ, white
GRN*	
BLU*	

ROM Defaut Value :
RED : 1F
GRN : 1F
BLU : 1F

PEAK — CRT Pin 6,8,11 — Oscillo. or colorimeter
PEAK WHITE ADJUSTMENT
= 50%
= 100%

Sets	Nits	Vpp
14"	450	70
20"	490	-
21"	490	-

Notes :
* Adjust separate for PAL / SECAM and NTSC/AV
* Régler séparément pour PAL / SECAM et NTSC/AV
* Den Abgleich der Videowerte für PAL, SECAM, NTSC/AV getrennt durchführen.
* Regolare separatamente in PAL, SECAM, NTSC/AV.
* Realice los ajustes en PAL, SECAM, NTSC/AV por separado.

HOTEL

HOTEL	ON : Available Validation Vorhanden Opción activa Opzione attivata OFF: Not available Non validé Nicht vorhanden Opzione non attivata Opción inactiva
MAX	The hotel mode ("MAX") is used to keep the volume down and allow adjustments to the picture only. Le mode hotel (ligne "MAX") permet de limiter le volume et d'avoir accès seulement aux réglages image. Der Hotel-Modus ("MAX") wird nur verwendet, um die Lautstärke zu begrenzen und um Bildeinstellungen vorzunehmen. Il modo hotel ("MAX") consente di bloccare il volume e di accedere alla sola regolazione dell' immagine. El modo hotel ("MAX") permite mantener el volumen bajo y acceder solamente al ajuste de imagen

LOCATION OF CONTROLS - EMPLACEMENT DES REGLAGES - SERVICE LAGEPLAN - POSIZIONE REGULATORI DI SERVIZIO - SITUACIÓN DE LOS AJUSTES

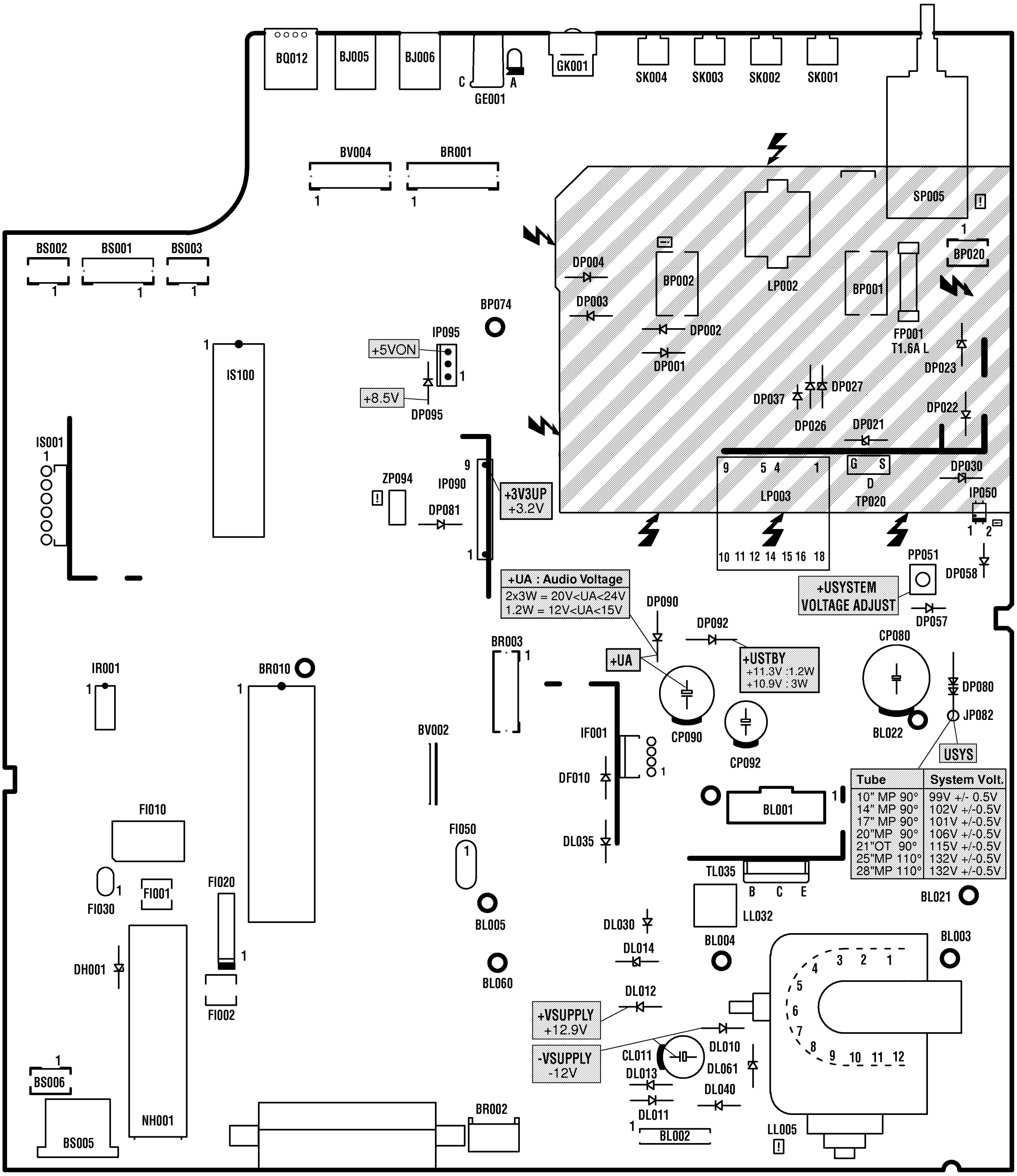

Tube	System Volt.
10" MP 90°	99V +/- 0.5V
14" MP 90°	102V +/-0.5V
17" MP 90°	101V +/-0.5V
20"MP 90°	106V +/-0.5V
21"OT 90°	115V +/-0.5V
25"MP 110°	132V +/-0.5V
28"MP 110°	132V +/-0.5V

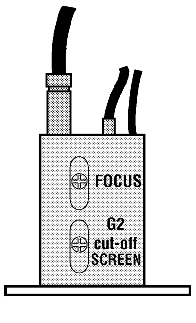

Part of board connected to mains supply.
Partie du châssis reliée au secteur.
Primärseite des Netzteils.
Parte dello châssis collegata alla rete.
Parte del chasis conectada a la red.

Use isolating mains transformer -
Utiliser un transformateur isolateur du secteur -
Trenntrafo verwenden -
Utilizar un transformador aislador de red -
Utilizzare un transformatore per isolarvi dalla rete

ADJUSTMENTS - REGLAGES - EINSTELLUNGEN - REGOLAZIONE - AJUSTES

U G2 / CUTOFF	LL05	Peak white pattern ◑ + ☼ + ◕ = 50%	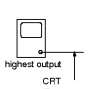 highest output CRT IB01: Pins 9 / 8 / 7	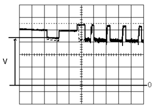
FOCUS	LL05	Coontrast = 100% Brightness = 0% Test pattern (standard values)		Sharp picture
MAIN **SYSTEM VOLTAGE** **+USYS**	PP051	◑ + ☼ + ◕ = 50% TV to AV : Black tes pattern AV	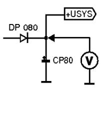	

Tube	V Cut-off
10" MP 90°	125V +/- 3V
14" MP 90°	125V +/- 3V
17" MP 90°	140V +/- 3V
20" MP 90°	140V +/- 3V
21" MP 90°	140V +/- 3V
21" QT 90°	140V +/- 3V
25" MP110°	140V +/- 3V

Tube	Usys	RL090	JL981-982	JL991-992
10" MP 90°	99V +/- 0.5V	78k8	JL981	JL992
14" MP 90°	102V +/-0.5V	76k8	JL982	JL992
17" MP 90°	101V +/-0.5V	76k8	JL982	JL991
20"MP 90°	106V +/-0.5V	86k6	JL981	JL992
21"QT 90°	115V +/-0.5V	95k3	JL982	JL992
25"MP 110°	132V +/-0.5V	-	JL981	JL992
28"MP 110°	132V +/-0.5V	-	JL981	JL992

SERVICE-MODE (GB)

It is necessary to enter the Service Mode in order to carry out alignment of the TV set. Most adjustments can be made with the RCU, except the Focus and Screen voltages.

1. Service Mode Access

1.1 With the RCU, switch the TV set into the "**Standby**" mode.
1.2 Switch "**Off**" the TV set by mains supply switch (wait until LED is dark).
1.3 Whilst pressing the "**Magenta** (text)" button on the RCU switch "**On**" the TV set using the mains switch.
Continue to press the "**Magenta** (text)" button until the Service-setup Sub-menu appears.

```
ID 00.07                 (1)

INIT        ◁ ▷          (2)
STANDARD    00  0-03     (3)
```

2. Service Menu

2.1 Navigation

- Press the ∧ / ∨ buttons to select the menu line.
- Press the ‹ / › buttons to make adjustments or selection of a menu item.

2.2 Service-Menu lines

Set-up lines (INIT,STANDARD,OSDCONTR) -
Geometry lines (HS,VS, VA, SC,VSH)
Video lines (CL, BLORS/BLORP,BLOGS/BLOGP,WPRS/WPRP,WPGS/WPGP, WPBS/WPBP, PWS/PWP, BKS, YD) -
IF lines (TOP) -
Video processor (CD0, CD1, SYN0, SYN1, DEF,VI0,VI1,SOUND,CONT0, CONT1,FEAT0).

2.3 Activation of a line :

The first line (1) is continuously displayed. Sequential selection of the others lines in the Service Menu is possible by pressing the ∧ / ∨ buttons on the RCU. The selected line will be highlighted in YELLOW text.

3. Alignment and storing new function value

3.1 The current value of the selected function is displayed in a hexadecimal form to the right of the function name. This value is adjusted by means of the RCU ‹ / › buttons.
3.2 The values will be stored in the non-volatile memory when leaving the service menu.
3.3 To leave the Service menu press the "**Exit**" button on the RCU.

4. Temporary exit from Service Mode

4.1 To temporary leave the Service Mode, press the "**Exit**" button on the RCU. To access the everyday menus, press the "**Menu**" button on the RCU.
4.2 To return to the Service Menu, press the "**Magenta**" button on the RCU

5. Leaving the Service Mode

5.1 To **EXIT** the Service Menu either press, the "**Standby**" button on the RCU or switch "**Off**" the mains supply to the TV.

MODE SERVICE (F)

Le mode service sert au réglage de l'appareil. Toutes les opérations de réglage s'effectuent à l'aide de la télécommande (sauf les réglages de Focus et de tension de grille-écran).

1. Accès au mode service

1.1 Commuter le téléviseur en position de veille avec la télécommande.
1.2 Eteindre le téléviseur par l'interrupteur secteur (attendre l'extinction complète du voyant).
1.3 Maintenir la touche "**Magenta** (text)" enfoncée et mettre simultanément le téléviseur en marche avec l'interrupteur secteur.
Ne pas relacher la touche "**Magenta** (text)" jusqu'à apparition du menu

```
ID 00.07                 (1)

INIT                     (2)
STANDARD    00  0-03     (3)
```

2. Menu Service

2.1 Déplacement

- Appuyer sur la touche ∧ / ∨ pour sélectionner une ligne de menu.
- Appuyer sur la touche ‹ / › pour un réglage ou une sélection d'une option.

2.2 Lignes de Menus du mode service

Set-up lines (INIT,STANDARD,OSDCONTR) -
Geometry lines (HS,VS, VA, SC,VSH)
Video lines (CL, BLORS/BLORP,BLOGS/BLOGP,WPRS/WPRP,WPGS/WPGP, WPBS/WPBP, PWS/PWP, BKS, YD) - **IF lines** (TOP) -
Videoprocessor (CD0, CD1, SYN0, SYN1, DEF,VI0,VI1,SOUND,CONT0, CONT1,FEAT0).

2.3 Sélection d'une ligne:

La premières ligne (1) du menu est toujours affichée.
De courtes pressions sur la touche "∧ / ∨" sélectionnent séquentiellement les lignes (2) ou (3) du menu de service.
La ligne activée est de couleur jaune.

3. Réglage des fonctions sélectionnées; mémorisation

3.1 La valeur momentanée de la fonction sélectionnée est indiquée sous forme hexadécimale à droite, à coté de la position à régler et peut être modifiée avec la télécommande par la touche ‹ / ›.
3.2 La valeur de réglage est mémorisée dans la mémoire non volatile en sortie de mode service.
3.3 Appuyer sur la touche "**Exit**" pour sortir d'un sous-menu.

4. Sortie temporaire du mode service

4.1 Utiliser la touche "**Exit**" de la télécommande.
Le menu utilisateur peut-être accesible via la touche "**Menu**".
4.2 Pour entrer à nouveau dans le Menu Setup utiliser la touche magenta.

5. Sortie du mode service

5.1 Pour sortir du mode service, commuter le téléviseur en position de veille ou le mettre hors service par l'interrupteur secteur.

SERVICE-MODE (D)

Der Service-Mode wird für den Geräteabgleich benötigt. Alle Einstellungen erfolgen mit der Fernbedienung (bis auf Fokuseinstellung und Schirmgitterspannung).

1.Service-Mode einschalten

1.1 Mit der Fernbedienung das Fernsehgerät in Stand-by schalten.
1.2 Das Gerät mit dem Netzschalter ausschalten (warten bis LED dunkel ist)
1.3 Während Sie die margentafarbene Taste **(text)** auf der Fernbedienung gedrückt halten, schalten Sie das Gerät mit dem Netzschalter ein. Halten Sie die margentafarbene Taste solange gedrückt bis das Service Setup Sub-Menü erscheint.

```
ID 00.07                 (1)

INIT                     (2)
STANDARD    00  0-03     (3)
```

2. Service Menü

2.1 Navigation

-Drücken Sie die Tasten ∧ / ∨ zum Auswählen der Menüzeile.
-Drücken Sie die ‹ / › -Tasten um eine Menüfunktion anzuwählen oder abzugleichen.

2.2 Service-Menü Zeilen

Set-up lines (INIT,STANDARD,OSDCONTR) -
Geometry lines (HS,VS, VA, SC,VSH)
Video lines (CL, BLORS/BLORP,BLOGS/BLOGP,WPRS/WPRP,WPGS/WPGP, WPBS/WPBP, PWS/PWP, BKS, YD) - **IF lines** (TOP) -
Videoprocessor (CD0, CD1, SYN0, SYN1, DEF,VI0,VI1,SOUND,CONT0, CONT1,FEAT0).

2.3 Aktivierung einer Menüzeile:

Die erste Zeile (1) wird ständig angezeigt. Die Anwahl der Zeilen (2) und (3) im Service-Menü ist durch Drücken der ∧ / ∨ - Tasten möglich.
Die gewählte Zeile wird in gelber Farbe dargestellt.

3. Abgleich der gewählten Funktion und Speichern

3.1 Der momentane Wert der gewählten Funktion wird hexadezimal rechts neben der abzugleichenden Position angegeben und kann mit der Taste ‹ / › auf der Fernbedienung verändert werden.
3.2 Die Werte werden nach dem Verlassen des Service-Menüs im nichtflüchtigen Speicher (EEPROM) abgelegt.
3.3 Drücken Sie "**Exit**" zum Verlassen eines Service Sub-Menüs.

4. Vorübergehendes verlassen des Service-Mode

4.1 Auf der Fernbedienung Exit drücken.
Mit der Tasten Menü gelangen Sie zum Menü-Übersicht.
4.2 Durch Drücken der margentafarbenen Taste gelangen Sie in das Service Setup Sub-Menü.

5. Service-Mode verlassen

5.1 Zum Verlassen des Service-Mode das Gerät in Stand By schalten oder mit dem Netzschalter ausschalten.

SERVICE-MODE (I)

Il Service-Mode è necessario per l'allineamento dell'apparecchio. Tutte le regolazioni si effettuano con il telecomando. (tranne le regolazioni del fuoco e le tensioni della griglia schermo).

1. Attivazione del Service-Mode

1.1 Commutare il televisore in stand-by con il telecomando.
1.2 Spegnere l'apparecchio con l'interruttore di rete (attendere finché il LED è spento)
1.3 Mentre tenete premuto il pulsante "**Magenta** (testo)" del RCU, accendete il televisore utilizzando l'interruttore di rete. Continuate a premere il pulsante "**Magenta** (testo)" del RCU fino all'apparizione del Service Setup Sub Menu

```
ID 00.07                 (1)

INIT                     (2)
STANDARD    00  0-03     (3)
```

2. Service Menu

2.1 Navigazione

- Premere i tasti ∧ / ∨ per selezionare la linea del menu
- Premere i tasti ‹ / › per la regolazione o la selezionz di un elemento del menu

2.2 Linee Service Menu

Set-up lines (INIT,STANDARD,OSDCONTR) -
Geometry lines (HS,VS, VA, SC,VSH)
Video lines (CL, BLORS/BLORP,BLOGS/BLOGP,WPRS/WPRP,WPGS/WPGP, WPBS/WPBP, PWS/PWP, BKS, YD) - **IF lines** (TOP) -
Videoprocessor (CD0, CD1, SYN0, SYN1, DEF,VI0,VI1,SOUND,CONT0, CONT1,FEAT0).

2.3 Attivazione di una linea :

La prima linea (1) è continuamente visualizzata. La selezione delle linee sucessive (2) o (3) è possibile in service menu premendo i tasi ∧ / ∨.
la linea selezionata sarà visualizzata di colore giallo.

3. Taratura della funzione scelta e memorizzazione

3.1 Il valore momentaneo della funzione scelta viene indicato in formato esadecimale a destra, accanto alla posizione da allineare e può essere cambiato con il pulsante ‹ / › del telecomando.
3.2 I valori verranno memorizzati nella memoria num quando verrà lasciato il menù service mode.
3.3 Premere il tasto "**Exit**" per uscire da qualsiasi Service Sub Menu.

4. Uscita temporanea dal Service Mode

4.1 Premere Exit sul telecomando.
Al menu di uso quotidiano si accede attraverso il pulsante Menu.
4.2 Il Service Setup Sub Menu è accessibile attraverso il tasto "**Magenta**".

5. Disattivazione del Service-Mode

5.1 Per disattivare il Service Mode, commutare l'apparecchio in stand-by o spegnerlo con l'interruttore di rete.

MODO SERVICIO (E)

Se necesita el MODO SERVICIO para ajustar el aparato. Todos los ajustes se hacen con el mando a distancia (a excepción de la tensión del sistema, los ajustes del foco y las tensiones de la rejilla de pantalla).

1. Ajustar el Modo Servicio

1.1 Con el mando a distancia conectar a STANDBY el televisor.
1.2 Desconectar el aparato con el interruptor de la red (esperar hasta que el LED se apague).
1.3 Mientras mantiene pulsado el botón "**Magenta** (texto)" de la UCR, pulse el interruptor general de red para encender el televisor.
Mantenga pulsado el botón "**Magenta** (texto)" hasta que aparezca el submenú de la configuración del servicio.

```
ID 00.07                 (1)

INIT                     (2)
STANDARD    00  0-03     (3)
```

2. Menú Servicio.

2.1 Desplazamiento
- Pulse el botón ∧ / ∨ para seleccionar la línea del menú.
- Pulse el botón ‹ / › para ajustar o seleccionar una opción del menú.

2.2 Líneas del menú del Modo Servicio
Set-up lines (INIT,STANDARD,OSDCONTR) -
Geometry lines (HS,VS, VA, SC,VSH)
Video lines (CL, BLORS/BLORP,BLOGS/BLOGP,WPRS/WPRP,WPGS/WPGP, WPBS/WPBP, PWS/PWP, BKS, YD) - **IF lines** (TOP) -
Videoprocessor (CD0, CD1, SYN0, SYN1, DEF,VI0,VI1,SOUND,CONT0, CONT1,FEAT0).

2.3 Activación de una línea :
La primera línea (1) se muestra siempre en la pantalla. La selección secuencial de las líneas (2) y (3), es posible pulsando las teclas ∧ / ∨.
La línea seleccionada es la que está en color amarillo

3. Ajuste de la función elegida y almacenamiento

3.1 El valor momentáneo de la función elegida es indicado de modo hexadecimal a la derecha, al lado de la posición a ajustar, y puede cambiarse con la tecla ‹ o bien › en el mando a distancia.
3.2 Los valores serán memorizados en la EEPROM al salir del menú del Modo Servicio.
3.3 Pulse el botón "**Exit**" para salir de cualquier submenú Servicio.

4. Salida temporal del Modo Servicio

4.1 Pulse Salir en el mando a distancia.
Con el botón Menu puede acceder al menú de uso cotidiano.
4.2 Puede acceder al submenú de configuración del servicio mediante el botón "**Magenta**".

5. Salir del Modo Servicio

5.1 Conmute el aparato a STANDBY a fin de salir del MODO SERVICIO o desconectar con el interruptor de la red.

ALIGNMENT PROCEDURE - PROCESSUS DE REGLAGES - ABGLEICH - VISUALIZZAZIONE DEL VALORE DI REGOLAZIONE - PROCEDIMIENTO DE ALINEACION

SET-UP LINES

ID	00.07	
INIT	◄►	
STANDARD	00	0-03
OSDCONTR	07	0-0F
FR	00	

ID 00.07	Software code

INIT
Initialise TV set.
Sets all Service Mode functions stored in the EEprom to their default values.
See below the default values table.

⚠ "INIT" copy all service parameters from the ROM to EEprom. It will be necessary in this case to readjust most of the service mode functions.

⚠ "INIT" copie toutes les valeurs par défaut stockées en ROM vers l'EEprom.Il peut être nécessaire dans ce cas de reprendre la plupart des réglages du mode service.

⚠ "INIT" kopiert alle Service-Parameter aus dem ROM in das EEPROM. Es ist anschliessend notwendig die meisten Service-Funktionen neu abzugleichen.

⚠ "INIT" copia tutti i parametri di servizio dalla ROM alla EEprom. Sarà necessario in seguito regolare alcune funzioni in Service Mode.

⚠ "INIT" copia todos los valores por defecto memorizados en la ROM hacia la EEPROM. Puede ser necesario en el caso de tener que reajustar la mayor parte de los ajustes en Modo Servicio.

STANDARD
RF Norm Group Selection

00	EU	BG / LL'
01	FR	LL' / BG
02	UK	PAL I only
03	DK	DKK' PAL, SECAM

ROM Default Value :
TX 807 C / CS Europe : 00 EU

OSDCONTR **Full-page video text contrast**	factory Setting OSDCONTR = 03H

FR Factory Setting: FR=00H
Specific TX807C mono TDA9351N1.

00: FR is not available in progr. menus.
00 :FR non disponible dans le menu de programmation
00: FR ist im Prog. Menü nicht verfügbar
00: FR non è disponibile nel menu prog.
00 : FR no está disponible en el menú programación

V-Slope

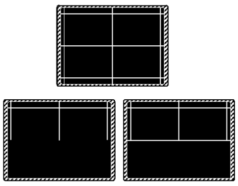

Correct — incorrect

GEOMETRY LINES*

HS	20	0-3F
VS	**◄ 1A**	**0-3F ►**
VA	20	0-3F
SC	10	0-3F
VSH	20	0-3F

HS

VS
V_Slope

- Apply a test pattern signal to the TV with a single horizontal and vertical line on the screen.
- Select the "**VS**" line of the menu. The bottom half of the screen will go black.
- Adjust VS until the centre line of the pattern is just invisible.
- Leave the line "**V_Slope**".
- Switch the test pattern signal to the crosshatch geometry pattern.
- Perform the geometry adjustments described below.

- Appliquer une mire de barres avec seulement une ligne blanche horizontale en milieu de l'écran.
- Sélectionner la ligne "**V-Slope**". La moitié basse de l'écran devient noire.
- Aligner "**V_Slope**" pour que la ligne médiane soit à peine non visible.
- Commuter la mire en mode de réglage de géométrie (quadrillage).
- Effectuer les reglages de geometrie ci- après.

- Speisen Sie ein Testbild mit einem horizontalen Strich in der Bildmitte ein.
- Wählen Sie im Menü die Funktion "V-Slope" an. Die untere Bildhälfte wird dunkel.
- Stellen Sie "V-Slope" so ein, daß die Mittellinie fast verschwindet.
- Verlassen Sie die Funktion "V-Slope".
- Speisen Sie ein Gittertestbild ein.
- Nehmen Sie die Geometrieeinstellungen wie nebenstehend beschrieben vor.

- Applicare un monoscopio con un'unica linea bianca orizzontale al centro dello schermo
- Selezionare la riga "**V slope**" del menu. La parte bassa dello schermo viene oscurata.
- Allineare la "Vertical Slope" in modo che la linea centrale sia appena visibile
- Abbandonare la riga "**V slope**".
- Posizionare il monoscopio
- Effettuare le regolazioni di geometria descritte in precedenza
- Memorizzare.

- Aplique una carta de ajuste con sólo una línea blanca horizontal y una vertical en el centro de la pantalla.
- Seleccionar en el menú, la línea "**V-Slope**". La mitad inferior de la pantalla se pondrá oscura.
- Ajuste "**V-Slope**" justo hasta que la línea horizontal sea invisible.
- Cambiar la carta de ajuste a "cuadricula" y efectuar los ajustes de geometria descritos a continuación.
- Antes de salir, memorizar con "Store"

VA

SC
S-Correction

VSH

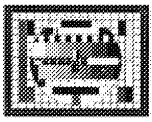

overscan :
V=107%
H=107%

VIDEO LINES

CL	**◄ 00**	**0-0F ►**		
BLORS*	08	0-0F		
BLOGS*	08	0-0F		
WPRS*	20	0-3F		
WPGS*	20	0-3F		
PWS*	20	20	20	0-3F
BKS*	ON	OFF-ON		
YD	08	0-0F		

CL
Cathode Level

Factory setting.
Extension of the peak White range.

Réglage usine.
Extension des valeurs de réglages du Peak White.

Factory Setting.
Extension of the peak White range.

Factory Setting.
Extension of the peak White range.

Ajuste de fábrica
Extensión del margen del Peak White.

Cutt-off **

BLORS / BLORP
Black level offset Red SECAM/PAL

BLOGS / BLOGP
Black level offset Green SECAM/PAL

☼ + ◑ + ◐ = 50%
Grey scale test pattern
white =100%
grey

Drive**

WPRS / WPRP
White point Red SECAM/PAL

WPGS / WPGP
White point Green SECAM/PAL

WPBS / WPBP
White point Blue SECAM/PAL

☼ + ◑ + ◐ = 50%
Grey scale test pattern
white =100%
white

PWS / PWP**
Peak White SECAM/PAL

CRT
Pin 6,8,11
Oscillo. or colourimeter

☼ + ◑ + ◐ = 50%

Sets	Nits	Vpp
14"	450	70
20"	490	-
21"	490	-

BKS **Black Stretch**	factory Setting

YD
Luminance Delay

Use ◊ to adapt the image

**Perform the G2 and the Focus settings beforehand.*
Effectuez au préalable les réglages de G2 et de focus.
Stellen Sie zuvor G2 und "Focus" ein.
Effetuare le regolazioni G2 e del Fuoco innanzitutto.
Efectuar previamente los ajustes de G2 y Foco

** Adjust separate for PAL / SECAM
" S " : Video signal received is SECAM.
" P " : Video signal received is PAL.

IF LINES

TOP	**◄ 20**	**0-0F ►**

TOP
AGC - Take Over

- Minimum noise- Minimum de bruit
- Minimum Rauschen - Rumore minimo
- Minimo ruido

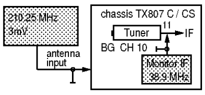

- Set TOP to 00
- Adjust TOP for maximum gain of IF signal.
- Reduce IF level about 8dB.

ROM Defaut Value : AGC : 20

VIDEO PROCESSOR LINES

CD0	84	0-FF
CD1	00	0-0F
SYN0	**◄ 30**	**0-FF ►**
SYN1	08	0-FF
DEF	00	0-0F
VI0	40	0-FF
VI1	00	0-0F
SOUND	00	0-FF
CONT0	46	0-FF
CONT1	00	0-0F
FEAT0	00	0-01

CD0 **CD1**	- Colour Decoder 0 = 84 - Colour Decoder 1 **mono sets: CD1 = 80H** **stereo sets: CD1 = 00H** Factory setting.
SYN0 **SYN1**	- Syncronisation 0 = 30 - Syncronisation 1 = 1C Factory setting.
DEF	- Deflection = 00 Factory setting.
VI0 **VI1**	- Vision IF 0 = 40 - Vision IF 1 = 00 Factory setting.
SOUND	- Sound = 00 Factory setting.
CONT0 **CONT0**	- Control 0 = 40 - Control 1 = 00 Factory setting.
FEAT0	- Features 0 = 00 Factory setting.

DEFAULT VALUES

OSD	DESCRIPTION	DEFAULT VALUE (HEX)
ID	Software	
INIT	Initialise TV set	
STANDARD	RF Norm Group Selection	0 (EU)
OSDCONTR	OSD Contrast	03
FR	France	00
HS	Horizontal shift	20
VS	Vertical Slope	1A
VA	Vertical Amplitude	20
SC	S-Correction	10
VSH	Vertical shift	20
CL	Cathode Level	00
BLORS	Black level offset Red SECAM	8
BLORP	Black level offset Red PAL	8
BLOGS	Black level offset Green SECAM	8
BLOGP	Black level offset Green SECAM	8
WPRS	White point Red SECAM	20
WPRP	White point Red PAL	20
WPGS	White point Green SECAM	20
WPGP	White point Green PAL	20
WPBS	White point Blue SECAM	20
WPBP	White point Blue PAL	20
PWS	Peak White SECAM	20
PWP	Peak White PAL	20
BKS	Black Stretch	01
YD	Luminance Delay	08
TOP	AGC take-over	20
CD0	Colour Decoder 0	84
CD1	Colour Decoder 1	Mono : 80 Stereo: 00
SYN0	Synchronisation 0	30
SYN1	Synchronisation 1	1C
DEF	Deflection	00
VI0	Vision IF 0	40
VI1	Vision IF 1	00
SOUND	Sound	00
CONT0	Control 0	40
CONT1	Control 1	00
FEAT0	Features 0	00

LOCATION OF CONTROLS - EMPLACEMENT DES REGLAGES - LAGEPLAN EINSTELLER - POSIZIONE REGULATORI DI SERVIZIO - SITUACIÓN DE LOS AJUSTES

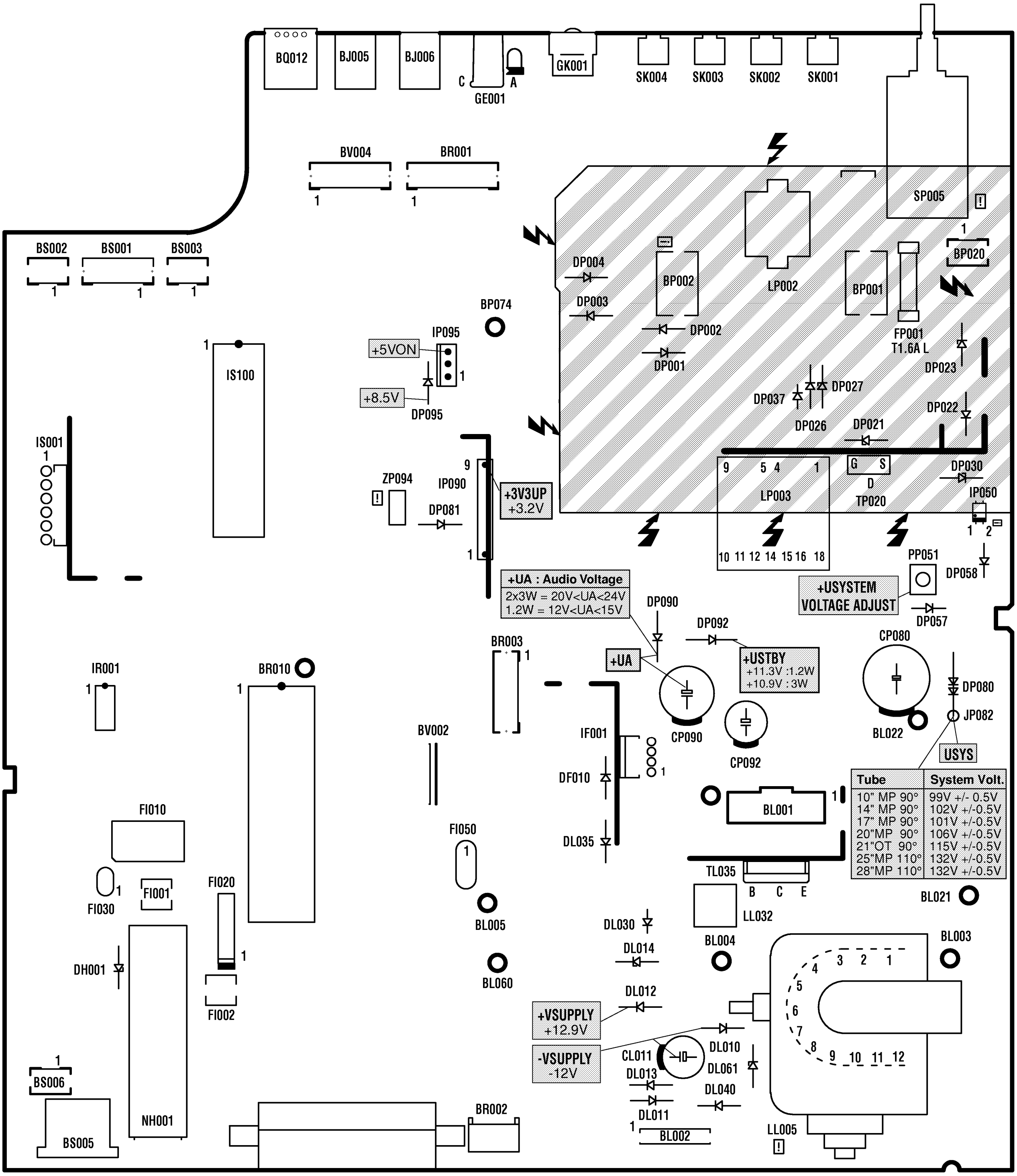

Tube	System Volt.
10" MP 90°	99V +/- 0.5V
14" MP 90°	102V +/-0.5V
17" MP 90°	101V +/-0.5V
20"MP 90°	106V +/-0.5V
21"OT 90°	115V +/-0.5V
25"MP 110°	132V +/-0.5V
28"MP 110°	132V +/-0.5V

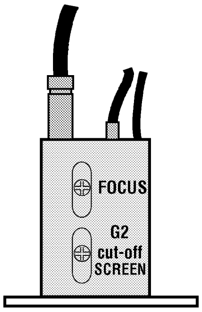

Part of board connected to mains supply.
Partie du châssis reliée au secteur.
Primärseite des Netzteils.
Parte dello châssis collegata alla rete.
Parte del chasis conectada a la red

Use isolating mains transformer -
Utiliser un transformateur isolateur du secteur -
Trenntrafo verwenden -
Utilizar un transformador aislador de red -
Utilizzare un transformatore per isolarvi dalla rete

ADJUSTMENTS - REGLAGES - EINSTELLUNGEN - REGOLAZIONE - AJUSTES

U G2 / CUTOFF — LL05

Peak white pattern

◐ + ☼ + ◑ = 50%

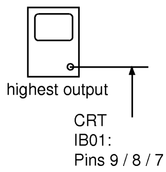

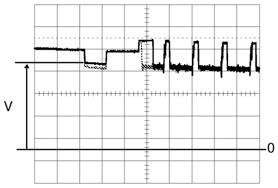

Tube	V Cutt-off
10" MP 90°	125V +/- 3V
14" MP 90°	125V +/- 3V
17" MP 90°	125V* +/- 3V
20" MP 90°	125V* +/- 3V
21" MP 90°	125V* +/- 3V
21" OT 90°	125V* +/- 3V
25" MP110°	125V* +/- 3V

140V: with IV001: TDA9554PS

FOCUS — LL05

Contrast = 100%
Brightness = 0%
Test pattern
(standard values)

Sharp picture

MAIN

SYSTEM VOLTAGE

+USYS — PP051

◐ + ☼ + ◑ = 50%

TV to AV : Black tes pattern

AV

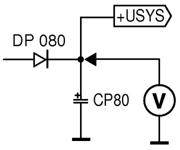

Tube	Usys	RL090	JL981-982	JL991-992
10" MP 90°	98V +/- 0.5V	76k8	JL981	JL992
14" MP 90°	101V +/-0.5V	76k8	JL982	JL992
17" MP 90°	101V +/-0.5V	76k8	JL982	JL991
20"MP 90°	106V +/-0.5V	86k6	JL981	JL992
21"OT 90°	114V +/-0.5V	95k3	JL982	JL992
25"MP 110°	132V +/-0.5V	127k	JL982	JL992
28"MP 110°	132V +/-0.5V	127k	JL982	JL992

EAST-WEST MODULE - MODULE EST-OUEST - OST-WEST-MODUL - MODULO EST-OVEST - MODULO ESTE-OESTE

GEOMETRY

TV : AV1 Test pattern
Standard TV - Settings :
☼ + ◑ + ◐ = 50%

Correct picture

EWM

PL140
PL141
PL143
SERVICE MODE

(GB) - Please refer to geometry Mode alignment (110° tube) , page 7, to adjust the East West Module (EWM).

(F) - Se référer à la méthode d'alignement des géometries (tubes 110°), page 7 pour effectuer les réglages du Module Est-Ouest (EWM).

(D) - Abgleich des Ost-West-Modules: Siehe Geometrie-Abgleich (110°), Seite 7.

(I) - Per le regolazioni del Modulo Est-Ovest fare riferimnto al modo allineamento geometria (tubi 110°), pagina 7.

(E) - Para los ajustes del módulo Este-Oeste (EWM) ver la página 7, modo ajuste geometría (tubo 110º)

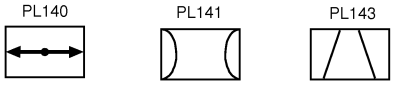

LOCATION OF CONTROLS - EMPLACEMENT DES REGLAGES - LAGEPLAN EINSTELLER - POSIZIONE REGULATORI DI SERVIZIO - SITUACIÓN DE LOS AJUSTES

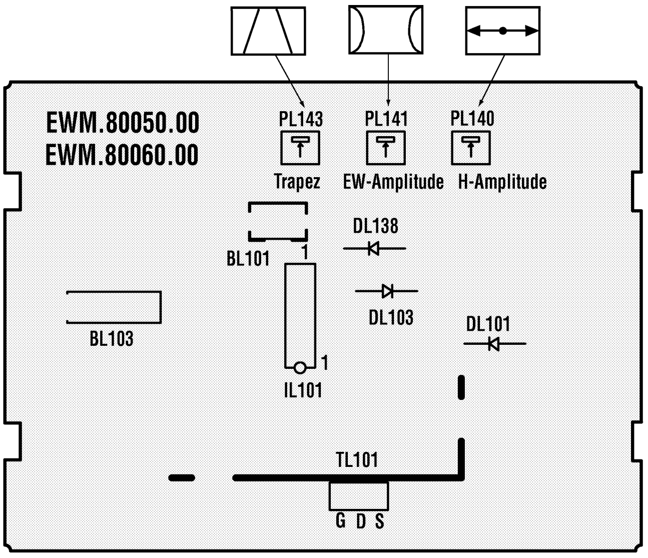

SERVICE-MODE (GB)

It is necessary to enter the Service Mode in order to carry out alignment of the TV set. Most adjustments can be made with the RCU, except the Focus and Screen voltages.

1. Service Mode Access

1.1 With the RCU, switch the TV set into the "**Standby**" mode.
1.2 Switch "**Off**" the TV set by mains supply switch (wait until LED is dark).
1.3 Whilst pressing the "**Magenta** (text)" button on the RCU switch "**On**" the TV set using the mains switch.
Continue to press the "**Magenta** (text)" button until the Service-setup Sub-menu appears.

```
ID 00.07                      (1)

INIT        ◁ ▷               (2)
STANDARD    00  0-03          (3)
```

2. Service Menu

2.1 Navigation

- Press the ∧/∨ buttons to select the menu line.
- Press the 《/》 buttons to make adjustments or selection of a menu item.

2.2 Service-Menu lines

Set-up lines (INIT,STANDARD,OSDCONTR) -
Geometry lines (HS,VS, VA, SC,VSH)
Video lines (CL, BLORS/BLORP,BLOGS/BLOGP,WPRS/WPRP,WPGS/WPGP, WPBS/WPBP, PWS/PWP, BKS, YD) -
IF lines (TOP) -
Video processor (CD0, CD1, SYN0, SYN1, DEF,VI0,VI1,SOUND,CONT0, CONT1,FEAT0).

2.3 Activation of a line :

The first line (1) is continuously displayed. Sequential selection of the others lines in the Service Menu is possible by pressing the ∧/∨ buttons on the RCU. The selected line will be highlighted in YELLOW text.

3. Alignment and storing new function value

3.1 The current value of the selected function is displayed in a hexadecimal form to the right of the function name. This value is adjusted by means of the RCU 《/》 buttons.
3.2 The values will be stored in the non-volatile memory when leaving the service menu.
3.3 To leave the Service menu press the "**Exit**" button on the RCU.

4. Temporary exit from Service Mode

4.1 To temporary leave the Service Mode, press the "**Exit**" button on the RCU. To access the everyday menus, press the "**Menu**" button on the RCU.
4.2 To return to the Service Menu, press the "**Magenta**" button on the RCU

5. Leaving the Service Mode

5.1 To **EXIT** the Service Menu either press, the "**Standby**" button on the RCU or switch "**Off**" the mains supply to the TV.

MODE SERVICE (F)

Le mode service sert au réglage de l'appareil. Toutes les opérations de réglage s'effectuent à l'aide de la télécommande (sauf les réglages de Focus et de tension de grille-écran).

1. Accès au mode service

1.1 Commuter le téléviseur en position de veille avec la télécommande.
1.2 Eteindre le téléviseur par l'interrupteur secteur (attendre l'extinction complète du voyant).
1.3 Maintenir la touche "**Magenta** (text)" enfoncée et mettre simultanément le téléviseur en marche avec l'interrupteur secteur.
Ne pas relacher la touche "**Magenta** (text)" jusqu'à apparition du menu

```
ID 00.07                      (1)

INIT                          (2)
STANDARD    00  0-03          (3)
```

2. Menu Service

2.1 Déplacement

- Appuyer sur la touche ∧/∨ pour sélectionner une ligne de menu.
- Appuyer sur la touche 《/》 pour un réglage ou une sélection d'une option.

2.2 Lignes de Menus du mode service

Set-up lines (INIT,STANDARD,OSDCONTR) -
Geometry lines (HS,VS, VA, SC,VSH)
Video lines (CL, BLORS/BLORP,BLOGS/BLOGP,WPRS/WPRP,WPGS/WPGP, WPBS/WPBP, PWS/PWP, BKS, YD) - **IF lines** (TOP) -
Videoprocessor (CD0, CD1, SYN0, SYN1, DEF,VI0,VI1,SOUND,CONT0, CONT1,FEAT0).

2.3 Sélection d'une ligne:

La premières ligne (1) du menu est toujours affichée.
De courtes pressions sur la touche "∧/∨" sélectionnent séquentiellement les lignes (2) ou (3) du menu de service.
La ligne activée est de couleur jaune.

3. Réglage des fonctions sélectionnées; mémorisation

3.1 La valeur momentanée de la fonction sélectionnée est indiquée sous forme hexadécimale à droite, à coté de la position à régler et peut être modifiée avec la télécommande par la touche 《/》 .
3.2 La valeur de réglage est mémorisée dans la mémoire non volatile en sortie de mode service.
3.3 Appuyer sur la touche "**Exit**" pour sortir d'un sous-menu.

4. Sortie temporaire du mode service

4.1 Utiliser la touche "**Exit**" de la télécommande.
Le menu utilisateur peut-être accesible via la touche "**Menu**".
4.2 Pour entrer à nouveau dans le Menu Setup utiliser la touche magenta.

5. Sortie du mode service

5.1 Pour sortir du mode service, commuter le téléviseur en position de veille ou le mettre hors service par l'interrupteur secteur.

SERVICE-MODE (D)

Der Service-Mode wird für den Geräteabgleich benötigt. Alle Einstellungen erfolgen mit der Fernbedienung (bis auf Fokuseinstellung und Schirmgitterspannung).

1.Service-Mode einschalten

1.1 Mit der Fernbedienung das Fernsehgerät in Stand-by schalten.
1.2 Das Gerät mit dem Netzschalter ausschalten (warten bis LED dunkel ist)
1.3 Während Sie die margentafarbene Taste **(text)** auf der Fernbedienung gedrückt halten, schalten Sie das Gerät mit dem Netzschalter ein. Halten Sie die margentafarbene Taste solange gedrückt bis das Service Setup Sub-Menü erscheint.

ID 00.07		*(1)*
INIT		*(2)*
STANDARD	00 0-03	*(3)*

2. Service Menü

2.1 Navigation

-Drücken Sie die Tasten ⋀ / ⋁ zum Auswählen der Menüzeile.
-Drücken Sie die 《/》 -Tasten um eine Menüfunktion anzuwählen oder abzugleichen.

2.2 Service-Menü Zeilen

Set-up lines (INIT,STANDARD,OSDCONTR) -
Geometry lines (HS,VS, VA, SC,VSH)
Video lines (CL, BLORS/BLORP,BLOGS/BLOGP,WPRS/WPRP,WPGS/WPGP, WPBS/WPBP, PWS/PWP, BKS, YD) - **IF lines** (TOP) -
Videoprocessor (CD0, CD1, SYN0, SYN1, DEF,VI0,VI1,SOUND,CONT0, CONT1,FEAT0).

2.3 Aktivierung einer Menüzeile:

Die erste Zeile (1) wird ständig angezeigt. Die Anwahl der Zeilen (2) und (3) im Service-Menü ist durch Drücken der ⋀ / ⋁- Tasten möglich.
Die gewählte Zeile wird in gelber Farbe dargestellt.

3. Abgleich der gewählten Funktion und Speichern

3.1 Der momentane Wert der gewählten Funktion wird hexadezimal rechts neben der abzugleichenden Position angegeben und kann mit der Taste 《/》 auf der Fembedienung verändert werden.
3.2 Die Werte werden nach dem Verlassen des Service-Menüs im nichtflüchtigen Speicher (EEPROM) abgelegt.
3.3 Drücken Sie "**Exit**" zum Verlassen eines Service Sub-Menüs.

4. Vorübergehendes verlassen des Service-Mode

4.1 Auf der Fernbedienung Exit drücken.
Mit der Tasten Menü gelangen Sie zum Menü-Übersicht.
4.2 Durch Drücken der margentafarbenen Taste gelangen Sie in das Service Setup Sub-Menü.

5. Service-Mode verlassen

5.1 Zum Verlassen des Service-Mode das Gerät in Stand By schalten oder mit dem Netzschalter ausschalten.

MODO SERVICIO (E)

Se necesita el MODO SERVICIO para ajustar el aparato. Todos los ajustes se hacen con el mando a distancia (a excepción de la tensión del sistema, los ajustes del foco y las tensiones de la rejilla de pantalla).

1. Ajustar el Modo Servicio

1.1 Con el mando a distancia conectar a STANDBY el televisor.
1.2 Desconectar el aparato con el interruptor de la red (esperar hasta que el LED se apague).
1.3 Mientras mantiene pulsado el botón "**Magenta** (texto)" de la UCR, pulse el interruptor general de red para encender el televisor.
Mantenga pulsado el botón "**Magenta** (texto)" hasta que aparezca el submenú de la configuración del servicio.

ID 00.07		*(1)*
INIT		*(2)*
STANDARD	00 0-03	*(3)*

2. Menú Servicio.

2.1 Desplazamiento
- Pulse el botón ⋀ / ⋁ para seleccionar la línea del menú.
- Pulse el botón 《/》 para ajustar o seleccionar una opción del menú.

2.2 Líneas del menú del Modo Servicio
Set-up lines (INIT,STANDARD,OSDCONTR) -
Geometry lines (HS,VS, VA, SC,VSH)
Video lines (CL, BLORS/BLORP,BLOGS/BLOGP,WPRS/WPRP,WPGS/WPGP, WPBS/WPBP, PWS/PWP, BKS, YD) - **IF lines** (TOP) -
Videoprocessor (CD0, CD1, SYN0, SYN1, DEF,VI0,VI1,SOUND,CONT0, CONT1,FEAT0).

2.3 Activación de una línea :
La primera línea (1) se muestra siempre en la pantalla. La selección secuencial de las líneas (2) y (3), es posible pulsando las teclas ⋀ / ⋁ .
La línea seleccionada es la que está en color amarillo

3. Ajuste de la función elegida y almacenamiento

3.1 El valor momentáneo de la función elegida es indicado de modo hexadecimal a la derecha, al lado de la posición a ajustar, y puede cambiarse con la tecla 《 o bien 》 en el mando a distancia.
3.2 Los valores serán memorizados en la EEPROM al salir del menú del Modo Servicio.
3.3 Pulse el botón "**Exit**" para salir de cualquier submenú Servicio.

4. Salida temporal del Modo Servicio

4.1 Pulse Salir en el mando a distancia.
Con el botón Menu puede acceder al menú de uso cotidiano.
4.2 Puede acceder al submenú de configuración del servicio mediante el botón "**Magenta**".

5. Salir del Modo Servicio

5.1 Conmute el aparato a STANDBY a fin de salir del MODO SERVICIO o desconectar con el interruptor de la red.

SERVICE-MODE (I)

Il Service-Mode è necessario per l’allineamento dell’apparecchio. Tutte le regolazioni si effettuano con il telecomando. (tranne le regolazionu del fuoco e le tensioni della griglia schermo).

1. Attivazione del Service-Mode

1.1 Commutare il televisore in stand-by con il telecomando.
1.2 Spegnere l’apparecchio con l’interruttore di rete (attendere finchè il LED è spento)
1.3 Mentre tenete premuto il pulsante "**Magenta** (testo)" del RCU, accendete il televisore utilizzando l'interruttore di rete. Continuate a premere il pulsante "**Magenta** (testo)" del RCU fino all'apparizione del Service Setup Sub Menu

ID 00.07		*(1)*
INIT		*(2)*
STANDARD	00 0-03	*(3)*

2. Service Menu

2.1 Navigazione

- Premere i tasti ⋀ / ⋁ per selezionare la linea del menu
- Premere i tasti 《/》 per la regolazione o la selezionz di un elemento del menu

2.2 Linee Service Menu

Set-up lines (INIT,STANDARD,OSDCONTR) -
Geometry lines (HS,VS, VA, SC,VSH)
Video lines (CL, BLORS/BLORP,BLOGS/BLOGP,WPRS/WPRP,WPGS/WPGP, WPBS/WPBP, PWS/PWP, BKS, YD) - **IF lines** (TOP) -
Videoprocessor (CD0, CD1, SYN0, SYN1, DEF,VI0,VI1,SOUND,CONT0, CONT1,FEAT0).

2.3 Attivazione di una linea :

La prima linea (1) è continuamente visualizzata. La selezione delle linee sucessive (2) o (3) è possibile in service menu premendo i tasi ⋀ / ⋁.
la linea selezionata sarà visualizzata di colore giallo.

3. Taratura della funzione scelta e memorizzazione

3.1 Il valore momentaneo della funzione scelta viene indicato in formato esadecimale a destra, accanto alla posizione da allineare e può essere cambiato con il pulsante 《/》 del telecomando.
3.2 I valori verranno memorizzati nella memoria num quando verrà lasciato il menù service mode.
3.3 Premere il tasto "**Exit**" per uscire da qualsiasi Service Sub Menu.

4. Uscita temporanea dal Service Mode

4.1 Premere Exit sul telecomando.
Al menu di uso quotidiano si accede attraverso il pulsante Menu.
4.2 Il Service Setup Sub Menu è accessibile attraverso il tasto "**Magenta**".

5. Disattivazione del Service-Mode

5.1 Per disattivare il Service Mode, commutare l’apparecchio in stand-by o spegnerlo con l’interruttore di rete.

SET-UP LINES

ID 02.11		
INIT		
STANDARD*	00	0-03
KEY	◀ **OFF**	**OFF-ON** ▶
OSDCONTR	03	0-0F
WBF-R*	88	0-FF
SOC1-0	2F	0-3F
OIFP**	20	0-3F

ID 00.07

INIT
Initialise TV set.
Sets all Service Mode functions stored in the EEprom to their default values.
See below the default values table.

⚠ "INIT" copy all service parameters from the ROM to EEprom. It will be necessary in this case to readjust most of the service mode functions.

⚠ "INIT" copie toutes les valeurs par défaut stockées en ROM vers l'EEprom.Il peut être nécessaire dans ce cas de reprendre la plupart des réglages du mode service.

⚠ "INIT" kopiert alle Service-Parameter aus dem ROM in das EEPROM. Es ist anschliessend notwendig die meisten Service-Funktionen neu abzugleichen

⚠ "INIT" copia tutti i parametri di servizio dalla ROM alla EEprom. Sarà necessario in seguito regolare alcune funzioni in Service Mode.

⚠ "INIT" copia todos los valores por defecto memorizados en la ROM hacia la EEPROM. Puede ser necesario en el caso de tener que reajustar la mayor parte de los ajustes en Modo Servicio

STANDARD
RF Norm Group Selection

00	**EU**	BG / LL'
01	**FR**	LL' / BG
02	**UK**	PAL I only
03	**DK**	DKK' PAL, SECAM

ROM Default Value :
TX 807 C / CS Europe : 00 EU

KEY	Key lock ON,OFF... Default value : OFF
OSDCONTR **Full-page video text contrast**	factory Setting OSDCONTR = 03H
WBF-R* **Timing of "wide blanking"**	factory Setting WBF-R = 88H
SOC1-0 **Peak White Limiting**	Specific TDA9554PS (UOC-N2) factory Setting SOC1=2FH
OIF **Offset IF demodulator**	Specific TDA9554PS (UOC-N2) factory Setting OIF=20H

V-Slope

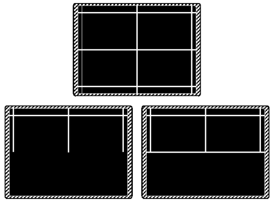

Correct incorrect

GEOMETRY LINES*

HS	20	0-3F
VS	◀ **1A**	**0-3F** ▶
VA	20	0-3F
SC	10	0-3F
VSH	20	0-3F

HS

VS
V_Slope

- Apply a test pattern signal to the TV with a single horizontal and vertical line on the screen.
- Select the "**VS**" line of the menu. The bottom half of the screen will go black.
- Adjust VS until the centre line of the pattern is just invisible.
- Leave the line "**V_Slope**".
- Switch the test pattern signal to the crosshatch geometry pattern.
- Perform the geometry adjustments described below.

- Appliquer une mire de barres avec seulement une ligne blanche horizontale en milieu de l'écran.
- Sélectionner la ligne "**V-Slope**". La moitié basse de l'écran devient noire.
- Aligner "**V_Slope**" pour que la ligne médiane soit à peine non visible.
- Commuter la mire en mode de réglage de géométrie (quadrillage).
- Effectuer les reglages de geometrie ci- après.

- Speisen Sie ein Testbild mit einem horizontalen Strich in der Bildmitte ein.
- Wählen Sie im Menü die Funktion "V-Slope" an. Die untere Bildhälfte wird dunkel.
- Stellen Sie "V-Slope" so ein, daß die Mittellinie fast verschwindet.
- Verlassen Sie die Funktion "V-Slope".
- Speisen Sie ein Gittertestbild ein.
- Nehmen Sie die Geometrieeinstellungen wie nebenstehend beschrieben vor.

- Applicare un monoscopio con un'unica linea bianca orizzontale al centro dello schermo
- Selezionare la riga "**V slope**" del menu. La parte bassa dello schermo viene oscurata.
- Allineare la "Vertical Slope" in modo che la linea centrale sia appena visibile
- Abbandonare la riga "**V slope**".
- Posizionare il monoscopio
- Effettuare le regolazioni di geometria descritte in precedenza
- Memorizzare.

- Aplique una carta de ajuste con sólo una línea blanca horizontal y una vertical en el centro de la pantalla.
- Seleccionar en el menú, la línea "**V-Slope**". La mitad inferior de la pantalla se pondrá oscura.
- Ajuste "**V-Slope**" justo hasta que la línea horizontal sea invisible.
- Cambiar la carta de ajuste a "cuadrícula" y efectuar los ajustes de geometria descritos a continuación
- Antes de salir, memorizar con "Store"

VA

SC
S-Correction

VSH

* According to software version.
** " S " : Video signal received is SECAM.
" P " : Video signal received is PAL.

VIDEO LINES

CL	◀ **00**	**0-0F** ▶		
BLORS*	08	0-0F		
BLOGS*	08	0-0F		
WPRS*	20	0-3F		
WPGS*	20	0-3F		
WPBS*	20	0-3F		
PWS*	20	20	20	0-3F
BKS*	ON	OFF-ON		
YD	08	0-0F		

CL
Cathode Level

Factory setting.
Extension of the peak White range.

Réglage usine.
Extension des valeurs de réglages du Peak White.

Fabrik-Einstellung
(Umfang des Spitzenweiß Ein-bereiches)

Factory Setting.
Extension of the peak White range.

Ajuste de fábrica
Extensión del margen del Peak White.

Cut-off **

BLORS / BLORP
Black Level Offset Red SECAM/PAL

BLOGS / BLOGP
Black Level Offset Green SECAM/PAL

☼ + ◐ + ◑ = 50%
Grey scale test pattern
white =100%
grey

Drive**

WPRS / WPRP
White Point Red SECAM/PAL

WPGS / WPGP
White Point Green SECAM/PAL

WPBS / WPBP
White Point Blue SECAM/PAL

☼ + ◐ + ◑ = 50%
Grey scale test pattern
white =100%
white

PWS / PWP**
Peak White SECAM/PAL

☼ + ◐ + ◑ = 50%
colourimeter

Sets	Nits	Sets	Nits
10"	500	21"OT	420
14"	450	21"MP 90°	450
17"	450	25"MP 110°	400
20"FB	450	28"MP 110°	300

BKS
Black Stretch
Factory Setting

YD
Luminance Delay
Use ◁▷ to adapt the image

**Perform the G2 and the Focus settings beforehand.*
Effectuez au préalable les réglages de G2 et de focus.
Stellen Sie zuvor G2 und "Focus" ein.
Effetuare le regolazioni G2 e del Fuoco innanzitutto.
Efectuar previamente los ajustes de G2 y Foco

** Adjust separate for PAL / SECAM
" S " : Video signal received is SECAM.
" P " : Video signal received is PAL.

IF LINES

TOP	◀ **20**	**0-0F** ▶
FFI	**00**	**0-01**
ACL*	**00**	**0-01**

TOP
AGC - Take Over
- Minimum noise- Minimum de bruit
- Minimum Rauschen - Rumore minimo
- Minimo ruido

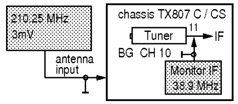

- Set TOP to 00
- Adjust TOP for maximum gain of IF signal.
- Reduce IF level about 8dB.

ROM Defaut Value : AGC : 20

FFI* **Fast Filter** **IF-PLL**	Fast Filter (IF / PLL) Filtre rapide (FI / PLL) Schnelles Filter (ZF / PLL) Filtro /rapido (IF / PLL) 00 : Europ Factory Setting.
ACL* **Automatic Colour limiting**	Factory Setting. ACL=00

VIDEO PROCESSOR LINES

CD0	84	0-FF
CD1	00	0-FF
SYN0	◀ **30**	**0-FF** ▶
SYN1	08	0-FF
DEF	00	0-0F
VI0	00	0-0F
VI1	00	0-0F
SOUND	00	0-FF
CONT0	46	0-FF
CONT1	00	0-0F
SOUND1	00	0-FF
FEAT0	00	0-01
FEAT1	00	0-01
LOCK	00	0-01
LIMIT	00	0-01

CD0 **CD1**	- Colour Decoder 0 = 84 - Colour Decoder 1 **mono sets: CD1 = 80H** **stereo sets: CD1 = 00H** Factory Setting.
SYN0 **SYN1**	- Syncronisation 0 = 30 - Syncronisation 1 = 1C Factory Setting.
DEF	- Deflection = 00 Factory Setting.
VI0 **VI1**	- Vision IF 0 = 40 - Vision IF 1 = 00 Factory Setting.
SOUND	- Sound = 00 Factory Setting.
CONT0 **CONT0**	- Control 0 = 40 - Control 1 = 00 Factory Setting.
FEAT0	- Features 0 = 00 Factory Setting.

* According to software version.

DEFAULT VALUES

OSD	DESCRIPTION	DEFAULT VALUE (HEX)
ID	Software	
INIT	Initialise TV set	
STANDARD	RF Norm Group Selection	0 (EU)
KEY	Key Lock	OFF
OSDCONTR	OSD Contrast	03
WBF-R	Timing of wide blanking	88
SOC1-0	Peak White Limiting	08
OIFS	Offset IF demodulator	20
FR	France	00
HS	Horizontal Shift	20
VS	Vertical Slope	1A
VA	Vertical Amplitude	20
SC	S-Correction	10
VSH	Vertical Shift	20
CL	Cathode Level	00
BLORS	Black Level Offset Red SECAM	8
BLORP	Black Level Offset Red PAL	8
BLOGS	Black Level Offset Green SECAM	8
BLOGP	Black Level Offset Green SECAM	8
WPRS	White Point Red SECAM	20
WPRP	White Point Red PAL	20
WPGS	White Point Green SECAM	20
WPGP	White Point Green PAL	20
WPBS	White Point Blue SECAM	20
WPBP	White Point Blue PAL	20
PWS	Peak White SECAM	20
PWP	Peak White PAL	20
BKS	Black Stretch	01
YD	Luminance Delay	08
TOP	AGC Take-Over	20
FFI	Fast Filter IF-PLL	00
ACL	Automatic Colour limiting	00
CD0	Colour Decoder 0	84
CD1	Colour Decoder 1	Mono : 80 Stereo: 00
SYN0	Synchronisation 0	30
SYN1	Synchronisation 1	1C
DEF	Deflection	00
VI0	Vision IF 0	40
VI1	Vision IF 1	00
SOUND	Sound	00
CONT0	Control 0	40
CONT1	Control 1	00
FEAT0	Features 0	00

GEOMETRY MODE ALIGNMENT

90° tube

Signal : 50 Hz - 4/3 test pattern

4 / 3 **standard mode**	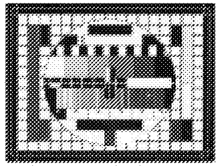	**Overscan V=107% , H=107%** 1 - Adjust Horizontal Centering (HS) 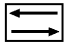 2 - Adjust Vertical centering (VSH) and Vertical amplitude 107% (VA) 3 - Adjust Vertical Slope (VS) and linearity (SC) 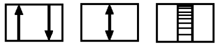 4-If necessary repeat VSH, VA alignment to 7% overscan.

110° tube

Signal : 50 Hz - 4/3 test pattern

4 / 3 **standard mode**	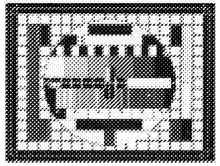	**Overscan V=107% , H=107%** **EAST-WEST MODULE** 1 - **PL140** : Turn fully counterclockwise. **MAIN BOARD** 2 - Adjust Horizontal Centering (HS) 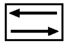 3 - Adjust Vertical centering (VSH) and Vertical amplitude 107% (VA) 4 - Adjust Vertical Slope (VS) and linearity (SC) 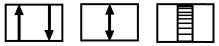 5 - If necessary repeat VSH, VA alignment to 7% overscan. **EAST-WEST MODULE** 6 - **PL140** : Adjust Horizontal amplitude with PL140 for optimum oversc 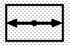 7 - **PL141** :Adjust Pincushion. 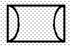 8 - **PL143** : Adjust Trapezium 9 -If necessary repeat Horizontal amplitude, pincushion correction and trapezium alignment

LOCATION OF CONTROLS - EMPLACEMENT DES REGLAGES - LAGEPLAN EINSTELLER - POSIZIONE REGULATORI DI SERVIZIO - SITUACIÓN DE LOS AJUSTES

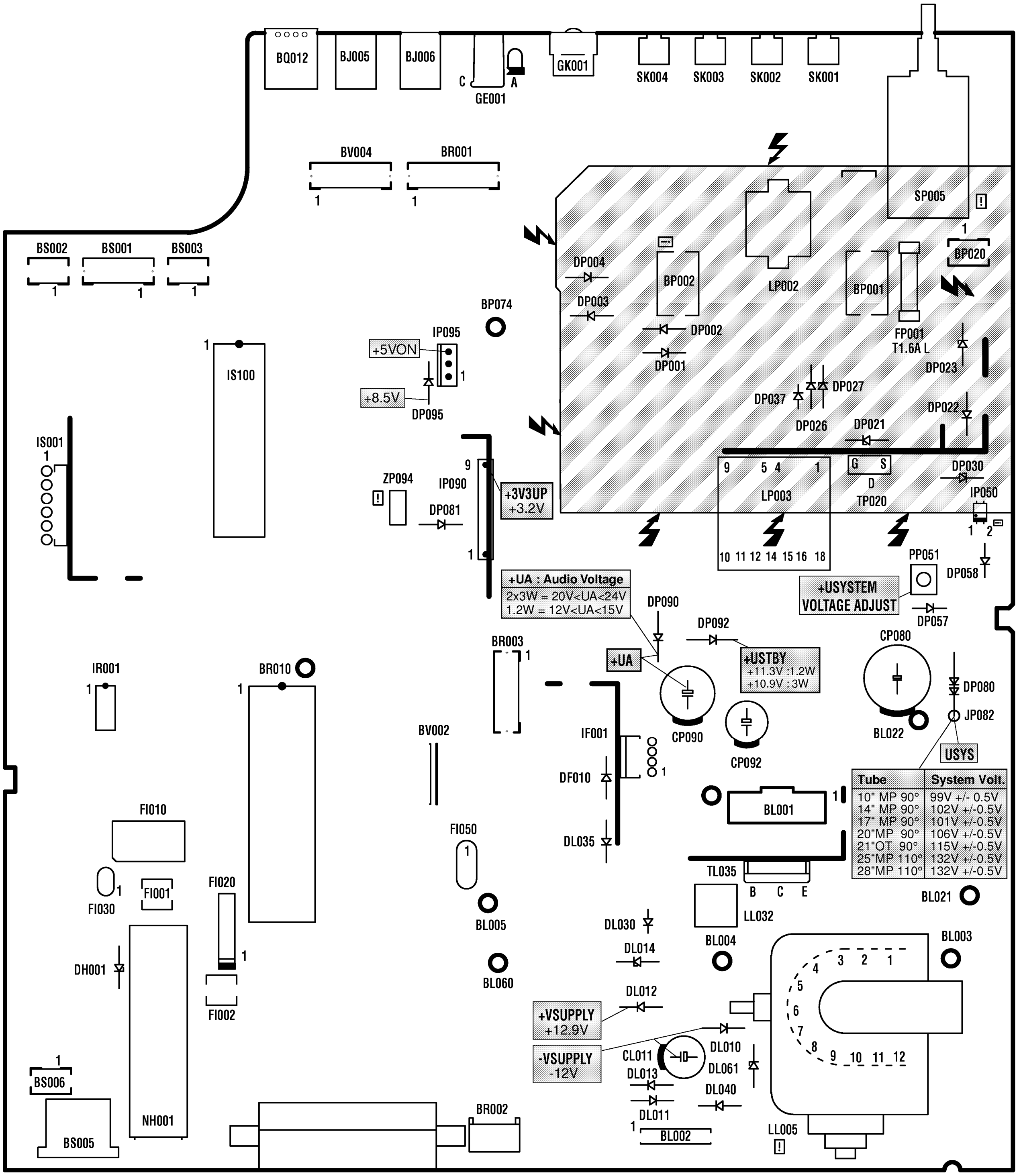

Tube	System Volt.
10" MP 90°	99V +/- 0.5V
14" MP 90°	102V +/-0.5V
17" MP 90°	101V +/-0.5V
20"MP 90°	106V +/-0.5V
21"OT 90°	115V +/-0.5V
25"MP 110°	132V +/-0.5V
28"MP 110°	132V +/-0.5V

Part of board connected to mains supply.
Partie du châssis reliée au secteur.
Primärseite des Netzteils.
Parte dello châssis collegata alla rete.
Parte del chasis conectada a la red

Use isolating mains transformer -
Utiliser un transformateur isolateur du secteur -
Trenntrafo verwenden -
Utilizar un transformador aislador de red -
Utilizzare un transformatore per isolarvi dalla rete

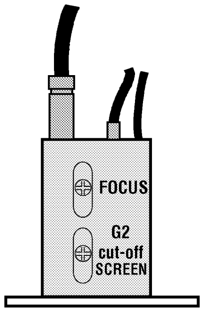

ADJUSTMENTS - REGLAGES - EINSTELLUNGEN - REGOLAZIONE - AJUSTES

U G2 / CUTOFF	LL05	Peak white pattern ◑ + ☼ + ◕ = 50%	highest output CRT IB01: Pins 9 / 8 / 7	see table below
FOCUS	LL05	Contrast = 100% Brightness = 0% Test pattern (standard values)		Sharp picture
MAIN **SYSTEM VOLTAGE** **+USYS**	PP051	◑ + ☼ + ◕ = 50% TV to AV : Black tes pattern AV	DP 080, +USYS, CP80, V	see table below

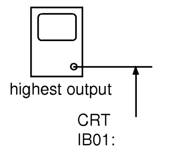

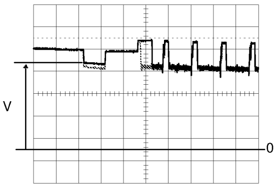

Tube	V Cutt-off
10" MP 90°	125V +/- 3V
14" MP 90°	125V +/- 3V
17" MP 90°	125V* +/- 3V
20" MP 90°	125V* +/- 3V
21" MP 90°	125V* +/- 3V
21" OT 90°	125V* +/- 3V
25" MP110°	125V* +/- 3V

140V: with IV001: TDA9554PS

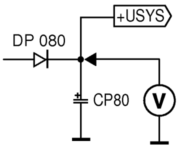

Tube	Usys	RL090	JL981-982	JL991-992
10" MP 90°	98V +/- 0.5V	76k8	JL981	JL992
14" MP 90°	101V +/-0.5V	76k8	JL982	JL992
17" MP 90°	101V +/-0.5V	76k8	JL982	JL991
20"MP 90°	106V +/-0.5V	86k6	JL981	JL992
21"OT 90°	114V +/-0.5V	95k3	JL982	JL992
25"MP 110°	132V +/-0.5V	127k	JL982	JL992
28"MP 110°	132V +/-0.5V	127k	JL982	JL992

EAST-WEST MODULE - MODULE EST-OUEST - OST-WEST-MODUL - MODULO EST-OVEST - MODULO ESTE-OESTE

GEOMETRY	TV : AV1 Test pattern Standard TV - Settings : ☼ + ◕ + ◑ = 50%		Correct picture

EWM — PL140, PL141, PL143, SERVICE MODE

- (GB) - Please refer to geometry Mode alignment (110° tube) , page 7, to adjust the East West Module (EWM).
- (F) - Se référer à la méthode d'alignement des géometries (tubes 110°), page 7 pour effectuer les réglages du Module Est-Ouest (EWM).
- (D) - Abgleich des Ost-West-Modules: Siehe Geometrie-Abgleich (110°), Seite 7.
- (I) - Per le regolazioni del Modulo Est-Ovest fare riferimnto al modo allineamento geometria (tubi 110°), pagina 7.
- (E) - Para los ajustes del módulo Este-Oeste (EWM) ver la página 7, modo ajuste geometría (tubo 110º)

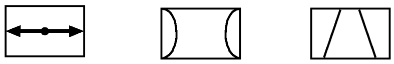

LOCATION OF CONTROLS - EMPLACEMENT DES REGLAGES - LAGEPLAN EINSTELLER - POSIZIONE REGULATORI DI SERVIZIO - SITUACIÓN DE LOS AJUSTES

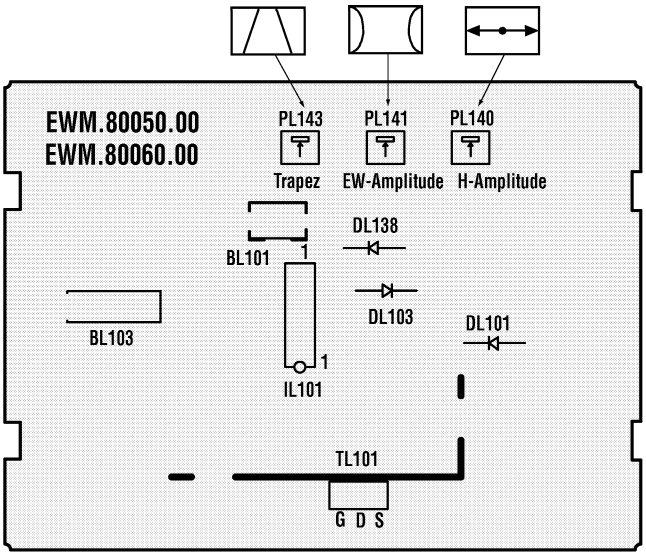

SERVICE-MODE (GB)

It is necessary to enter the Service Mode in order to carry out alignment of the TV set. Most adjustments can be made with the RCU, except the Focus and Screen voltages.

1. Service Mode Access

1.1 With the RCU, switch the TV set into the "**Standby**" mode.
1.2 Switch "**Off**" the TV set by mains supply switch (wait until LED is dark).
1.3 Whilst pressing the "**Magenta** (text)" button on the RCU switch "**On**" the TV set using the mains switch.
Continue to press the "**Magenta** (text)" button until the Service-setup Sub-menu appears.

ID 00.07		*(1)*
INIT	◁ ▷	*(2)*
STANDARD	00 0-03	*(3)*

2. Service Menu

2.1 Navigation

- Press the ⌃ / ⌄ buttons to select the menu line.
- Press the 《/》 buttons to make adjustments or selection of a menu item.

2.2 Service-Menu lines

Set-up lines (INIT,STANDARD,OSDCONTR) -
Geometry lines (HS,VS, VA, SC,VSH)
Video lines (CL, BLORS/BLORP,BLOGS/BLOGP,WPRS/WPRP,WPGS/WPGP, WPBS/WPBP, PWS/PWP, BKS, YD) -
IF lines (TOP) -
Video processor (CD0, CD1, SYN0, SYN1, DEF,VI0,VI1,SOUND,CONT0, CONT1,FEAT0).

2.3 Activation of a line :

The first line (1) is continuously displayed. Sequential selection of the others lines in the Service Menu is possible by pressing the ⌃ / ⌄ buttons on the RCU. The selected line will be highlighted in YELLOW text.

3. Alignment and storing new function value

3.1 The current value of the selected function is displayed in a hexadecimal form to the right of the function name. This value is adjusted by means of the RCU 《/》 buttons.
3.2 The values will be stored in the non-volatile memory when leaving the service menu.
3.3 To leave the Service menu press the "**Exit**" button on the RCU.

4. Temporary exit from Service Mode

4.1 To temporary leave the Service Mode, press the "**Exit**" button on the RCU. To access the everyday menus, press the "**Menu**" button on the RCU.
4.2 To return to the Service Menu, press the "**Magenta**" button on the RCU

5. Leaving the Service Mode

5.1 To **EXIT** the Service Menu either press, the "**Standby**" button on the RCU or switch "**Off**" the mains supply to the TV.

MODE SERVICE (F)

Le mode service sert au réglage de l'appareil. Toutes les opérations de réglage s'effectuent à l'aide de la télécommande (sauf les réglages de Focus et de tension de grille-écran).

1. Accès au mode service

1.1 Commuter le téléviseur en position de veille avec la télécommande.
1.2 Eteindre le téléviseur par l'interrupteur secteur (attendre l'extinction complète du voyant).
1.3 Maintenir la touche "**Magenta** (text)" enfoncée et mettre simultanément le teléviseur en marche avec l'interrupteur secteur.
Ne pas relacher la touche "**Magenta** (text)" jusqu'à apparition du menu

ID 00.07		*(1)*
INIT		*(2)*
STANDARD	00 0-03	*(3)*

2. Menu Service

2.1 Déplacement

- Appuyer sur la touche ⌃ / ⌄ pour sélectionner une ligne de menu.
- Appuyer sur la touche 《/》pour un réglage ou une sélection d'une option.

2.2 Lignes de Menus du mode service

Set-up lines (INIT,STANDARD,OSDCONTR) -
Geometry lines (HS,VS, VA, SC,VSH)
Video lines (CL, BLORS/BLORP,BLOGS/BLOGP,WPRS/WPRP,WPGS/WPGP, WPBS/WPBP, PWS/PWP, BKS, YD) - **IF lines** (TOP) -
Videoprocessor (CD0, CD1, SYN0, SYN1, DEF,VI0,VI1,SOUND,CONT0, CONT1,FEAT0).

2.3 Sélection d'une ligne:

La premières ligne (1) du menu est toujours affichée.
De courtes pressions sur la touche "⌃ / ⌄" sélectionnent séquentiellement les lignes (2) ou (3) du menu de service.
La ligne activée est de couleur jaune.

3. Réglage des fonctions sélectionnées; mémorisation

3.1 La valeur momentanée de la fonction sélectionnée est indiquée sous forme hexadécimale à droite, à coté de la position à régler et peut être modifiée avec la télécommande par la touche 《/》 .
3.2 La valeur de réglage est mémorisée dans la mémoire non volatile en sortie de mode service.
3.3 Appuyer sur la touche "**Exit**" pour sortir d'un sous-menu.

4. Sortie temporaire du mode service

4.1 Utiliser la touche "**Exit**" de la télécommande.
Le menu utilisateur peut-être accesible via la touche "**Menu**".
4.2 Pour entrer à nouveau dans le Menu Setup utiliser la touche magenta.

5. Sortie du mode service

5.1 Pour sortir du mode service, commuter le téléviseur en position de veille ou le mettre hors service par l'interrupteur secteur.

SERVICE-MODE (D)

Der Service-Mode wird für den Geräteabgleich benötigt. Alle Einstellungen erfolgen mit der Fernbedienung (bis auf Fokuseinstellung und Schirmgitterspannung).

1.Service-Mode einschalten

1.1 Mit der Fernbedienung das Fernsehgerät in Stand-by schalten.
1.2 Das Gerät mit dem Netzschalter ausschalten (warten bis LED dunkel ist)
1.3 Während Sie die margentafarbene Taste **(text)** auf der Fernbedienung gedrückt halten, schalten Sie das Gerät mit dem Netzschalter ein. Halten Sie die margentafarbene Taste solange gedrückt bis das Service Setup Sub-Menü erscheint.

ID 00.07	*(1)*
INIT	*(2)*
STANDARD 00 0-03	*(3)*

2. Service Menü

2.1 Navigation

-Drücken Sie die Tasten ∧ / ∨ zum Auswählen der Menüzeile.
-Drücken Sie die 〈/〉 -Tasten um eine Menüfunktion anzuwählen oder abzugleichen.

2.2 Service-Menü Zeilen

Set-up lines (INIT,STANDARD,OSDCONTR) -
Geometry lines (HS,VS, VA, SC,VSH)
Video lines (CL, BLORS/BLORP,BLOGS/BLOGP,WPRS/WPRP,WPGS/WPGP, WPBS/WPBP, PWS/PWP, BKS, YD) - **IF lines** (TOP) -
Videoprocessor (CD0, CD1, SYN0, SYN1, DEF,VI0,VI1,SOUND,CONT0, CONT1,FEAT0).

2.3 Aktivierung einer Menüzeile:

Die erste Zeile (1) wird ständig angezeigt. Die Anwahl der Zeilen (2) und (3) im Service-Menü ist durch Drücken der ∧ / ∨ - Tasten möglich.
Die gewählte Zeile wird in gelber Farbe dargestellt.

3. Abgleich der gewählten Funktion und Speichern

3.1 Der momentane Wert der gewählten Funktion wird hexadezimal rechts neben der abzugleichenden Position angegeben und kann mit der Taste 〈/〉 auf der Fernbedienung verändert werden.
3.2 Die Werte werden nach dem Verlassen des Service-Menüs im nichtflüchtigen Speicher (EEPROM) abgelegt.
3.3 Drücken Sie "**Exit**" zum Verlassen eines Service Sub-Menüs.

4. Vorübergehendes verlassen des Service-Mode

4.1 Auf der Fernbedienung Exit drücken.
Mit der Tasten Menü gelangen Sie zum Menü-Übersicht.
4.2 Durch Drücken der margentafarbenen Taste gelangen Sie in das Service Setup Sub-Menü.

5. Service-Mode verlassen

5.1 Zum Verlassen des Service-Mode das Gerät in Stand By schalten oder mit dem Netzschalter ausschalten.

SERVICE-MODE (I)

Il Service-Mode è necessario per l'allineamento dell'apparecchio. Tutte le regolazioni si effettuano con il telecomando. (tranne le regolazionu del fuoco e le tensioni della griglia schermo).

1. Attivazione del Service-Mode

1.1 Commutare il televisore in stand-by con il telecomando.
1.2 Spegnere l'apparecchio con l'interruttore di rete (attendere finchè il LED è spento)
1.3 Mentre tenete premuto il pulsante "**Magenta** (testo)" del RCU, accendete il televisore utilizzando l'interruttore di rete. Continuate a premere il pulsante "**Magenta** (testo)" del RCU fino all'apparizione del Service Setup Sub Menu

ID 00.07	*(1)*
INIT	*(2)*
STANDARD 00 0-03	*(3)*

2. Service Menu

2.1 Navigazione

- Premere i tasti ∧ / ∨ per selezionare la linea del menu
- Premere i tasti 〈/〉 per la regolazione o la selezionz di un elemento del menu

2.2 Linee Service Menu

Set-up lines (INIT,STANDARD,OSDCONTR) -
Geometry lines (HS,VS, VA, SC,VSH)
Video lines (CL, BLORS/BLORP,BLOGS/BLOGP,WPRS/WPRP,WPGS/WPGP, WPBS/WPBP, PWS/PWP, BKS, YD) - **IF lines** (TOP) -
Videoprocessor (CD0, CD1, SYN0, SYN1, DEF,VI0,VI1,SOUND,CONT0, CONT1,FEAT0).

2.3 Attivazione di una linea :

La prima linea (1) è continuamente visualizzata. La selezione delle linee sucessive (2) o (3) è possibile in service menu premendo i tasi ∧ / ∨.
la linea selezionata sarà visualizzata di colore giallo.

3. Taratura della funzione scelta e memorizzazione

3.1 Il valore momentaneo della funzione scelta viene indicato in formato esadecimale a destra, accanto alla posizione da allineare e può essere cambiato con il pulsante 〈/〉 del telecomando.
3.2 I valori verranno memorizzati nella memoria num quando verrà lasciato il menù service mode.
3.3 Premere il tasto "**Exit**" per uscire da qualsiasi Service Sub Menu.

4. Uscita temporanea dal Service Mode

4.1 Premere Exit sul telecomando.
Al menu di uso quotidiano si accede attraverso il pulsante Menu.
4.2 Il Service Setup Sub Menu è accessibile attraverso il tasto "**Magenta**".

5. Disattivazione del Service-Mode

5.1 Per disattivare il Service Mode, commutare l'apparecchio in stand-by o spegnerlo con l'interruttore di rete.

MODO SERVICIO (E)

Se necesita el MODO SERVICIO para ajustar el aparato. Todos los ajustes se hacen con el mando a distancia (a excepción de la tensión del sistema, los ajustes del foco y las tensiones de la rejilla de pantalla).

1. Ajustar el Modo Servicio

1.1 Con el mando a distancia conectar a STANDBY el televisor.
1.2 Desconectar el aparato con el interruptor de la red (esperar hasta que el LED se apague).
1.3 Mientras mantiene pulsado el botón "**Magenta** (texto)" de la UCR, pulse el interruptor general de red para encender el televisor.
Mantenga pulsado el botón "**Magenta** (texto)" hasta que aparezca el submenú de la configuración del servicio.

ID 00.07	*(1)*
INIT	*(2)*
STANDARD 00 0-03	*(3)*

2. Menú Servicio.

2.1 Desplazamiento
- Pulse el botón ∧ / ∨ para seleccionar la línea del menú.
- Pulse el botón 〈/〉 para ajustar o seleccionar una opción del menú.

2.2 Líneas del menú del Modo Servicio
Set-up lines (INIT,STANDARD,OSDCONTR) -
Geometry lines (HS,VS, VA, SC,VSH)
Video lines (CL, BLORS/BLORP,BLOGS/BLOGP,WPRS/WPRP,WPGS/WPGP, WPBS/WPBP, PWS/PWP, BKS, YD) - **IF lines** (TOP) -
Videoprocessor (CD0, CD1, SYN0, SYN1, DEF,VI0,VI1,SOUND,CONT0, CONT1,FEAT0).

2.3 Activación de una línea :
La primera línea (1) se muestra siempre en la pantalla. La selección secuencial de las líneas (2) y (3), es posible pulsando las teclas ∧ / ∨ .
La línea seleccionada es la que está en color amarillo

3. Ajuste de la función elegida y almacenamiento

3.1 El valor momentáneo de la función elegida es indicado de modo hexadecimal a la derecha, al lado de la posición a ajustar, y puede cambiarse con la tecla 〈 o bien 〉 en el mando a distancia.
3.2 Los valores serán memorizados en la EEPROM al salir del menú del Modo Servicio.
3.3 Pulse el botón "**Exit**" para salir de cualquier submenú Servicio.

4. Salida temporal del Modo Servicio

4.1 Pulse Salir en el mando a distancia.
Con el botón Menu puede acceder al menú de uso cotidiano.
4.2 Puede acceder al submenú de configuración del servicio mediante el botón "**Magenta**".

5. Salir del Modo Servicio

5.1 Conmute el aparato a STANDBY a fin de salir del MODO SERVICIO o desconectar con el interruptor de la red.

ALIGNMENT PROCEDURE - PROCESSUS DE REGLAGES - ABGLEICH - VISUALIZZAZIONE DEL VALORE DI REGOLAZIONE - PROCEDIMIENTO DE ALINEACION

SET-UP LINES

ID 02.11		
INIT		
STANDARD*	00	0-03
KEY	◀ **OFF**	**OFF-ON** ▶
OSDCONTR	03	0-0F
WBF-R*	88	0-FF
SOC1-0	2F	0-3F
OIFP**	20	0-3F

ID 00.07

INIT
Initialise TV set.
Sets all Service Mode functions stored in the EEprom to their default values.
See below the default values table.

⚠ "INIT" copy all service parameters from the ROM to EEprom. It will be necessary in this case to readjust most of the service mode functions.

⚠ "INIT" copie toutes les valeurs par défaut stockées en ROM vers l'EEprom.Il peut être nécessaire dans ce cas de reprendre la plupart des réglages du mode service.

⚠ "INIT" kopiert alle Service-Parameter aus dem ROM in das EEPROM. Es ist anschliessend notwendig die meisten Service-Funktionen neu abzugleichen

⚠ "INIT" copia tutti i parametri di servizio dalla ROM alla EEprom. Sarà necessario in seguito regolare alcune funzioni in Service Mode.

⚠ "INIT" copia todos los valores por defecto memorizados en la ROM hacia la EEPROM. Puede ser necesario en el caso de tener que reajustar la mayor parte de los ajustes en Modo Servicio

STANDARD
RF Norm Group Selection

00	**EU**	BG / LL'
01	**FR**	LL' / BG
02	**UK**	PAL I only
03	**DK**	DKK' PAL, SECAM

ROM Default Value :
TX 807 C / CS Europe : 00 EU

KEY	Key lock ON,OFF... Default value : OFF
OSDCONTR **Full-page video text contrast**	factory Setting OSDCONTR = 03H
WBF-R* **Timing of "wide blanking"**	factory Setting WBF-R = 88H
SOC1-0 **Peak White Limiting**	Specific TDA9554PS (UOC-N2) factory Setting SOC1=2FH
OIF **Offset IF demodulator**	Specific TDA9554PS (UOC-N2) factory Setting OIF=20H

V-Slope

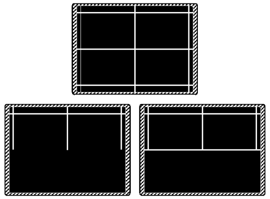

Correct   incorrect

GEOMETRY LINES*

HS	20	0-3F
VS	◀ **1A**	**0-3F** ▶
VA	20	0-3F
SC	10	0-3F
VSH	20	0-3F

HS

VS
V_Slope

- Apply a test pattern signal to the TV with a single horizontal and vertical line on the screen.
- Select the "**VS**" line of the menu. The bottom half of the screen will go black.
- Adjust VS until the centre line of the pattern is just invisible.
- Leave the line "**V_Slope**".
- Switch the test pattern signal to the crosshatch geometry pattern.
- Perform the geometry adjustments described below.

- Appliquer une mire de barres avec seulement une ligne blanche horizontale en milieu de l'écran.
- Sélectionner la ligne "**V-Slope**". La moitié basse de l'écran devient noire.
- Aligner "**V_Slope**" pour que la ligne médiane soit à peine non visible.
- Commuter la mire en mode de réglage de géométrie (quadrillage).
- Effectuer les reglages de geometrie ci- après.

- Speisen Sie ein Testbild mit einem horizontalen Strich in der Bildmitte ein.
- Wählen Sie im Menü die Funktion "V-Slope" an. Die untere Bildhälfte wird dunkel.
- Stellen Sie "V-Slope" so ein, daß die Mittellinie fast verschwindet.
- Verlassen Sie die Funktion "V-Slope".
- Speisen Sie ein Gittertestbild ein.
- Nehmen Sie die Geometrieeinstellungen wie nebenstehend beschrieben vor.

- Applicare un monoscopio con un'unica linea bianca orizzontale al centro dello schermo
- Selezionare la riga "**V slope**" del menu. La parte bassa dello schermo viene oscurata.
- Allineare la "Vertical Slope" in modo che la linea centrale sia appena visibile
- Abbandonare la riga "**V slope**".
- Posizionare il monoscopio
- Effettuare le regolazioni di geometria descritte in precedenza
- Memorizzare.

- Aplique una carta de ajuste con sólo una línea blanca horizontal y una vertical en el centro de la pantalla.
- Seleccionar en el menú, la línea "**V-Slope**". La mitad inferior de la pantalla se pondrá oscura.
- Ajuste "**V-Slope**" justo hasta que la línea horizontal sea invisible.
- Cambiar la carta de ajuste a "cuadrícula" y efectuar los ajustes de geometria descritos a continuación
- Antes de salir, memorizar con "Store"

VA

SC
S-Correction

VSH

* According to software version.
** " S " : Video signal received is SECAM.
" P " : Video signal received is PAL.

VIDEO LINES

CL	◀ **00**	**0-0F** ▶		
BLORS*	08	0-0F		
BLOGS*	08	0-0F		
WPRS*	20	0-3F		
WPGS*	20	0-3F		
WPBS*	20	0-3F		
PWS*	20	20	20	0-3F
BKS*	ON	OFF-ON		
YD	08	0-0F		

CL **Cathode Level**	Factory setting. Extension of the peak White range. Réglage usine. Extension des valeurs de réglages du Peak White. Fabrik-Einstellung (Umfang des Spitzenweiß Ein-bereiches) Factory Setting. Extension of the peak White range. Ajuste de fábrica Extensión del margen del Peak White.
Cut-off ** **BLORS / BLORP Black Level Offset Red SECAM/PAL** **BLOGS / BLOGP Black Level Offset Green SECAM/PAL**	☼ + ◐ + ◑ = 50% Grey scale test pattern white =100% grey
Drive** **WPRS / WPRP White Point Red SECAM/PAL** **WPGS / WPGP White Point Green SECAM/PAL** **WPBS / WPBP White Point Blue SECAM/PAL**	☼ + ◐ + ◑ = 50% Grey scale test pattern white =100% white
PWS / PWP** **Peak White SECAM/PAL**	☼ + ◐ + ◑ = 50% colourimeter
BKS **Black Stretch**	Factory Setting
YD **Luminance Delay**	Use ◁▷ to adapt the image

Sets	Nits	Sets	Nits
10"	500	21"OT	420
14"	450	21"MP 90°	450
17"	450	25"MP 110°	400
20"FB	450	28"MP 110°	300

**Perform the G2 and the Focus settings beforehand.*
Effectuez au préalable les réglages de G2 et de focus.
Stellen Sie zuvor G2 und "Focus" ein.
Effetuare le regolazioni G2 e del Fuoco innanzitutto.
Efectuar previamente los ajustes de G2 y Foco

** Adjust separate for PAL / SECAM
" S " : Video signal received is SECAM.
" P " : Video signal received is PAL.

IF LINES

TOP	◀ **20**	**0-0F** ▶
FFI	**00**	**0-01**
ACL*	**00**	**0-01**

TOP
AGC - Take Over

- Minimum noise- Minimum de bruit
- Minimum Rauschen - Rumore minimo
- Minimo ruido

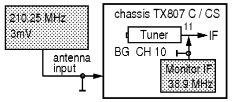

- Set TOP to 00
- Adjust TOP for maximum gain of IF signal.
- Reduce IF level about 8dB.

ROM Defaut Value : AGC : 20

FFI* **Fast Filter IF-PLL**	Fast Filter (IF / PLL) Filtre rapide (FI / PLL) Schnelles Filter (ZF / PLL) Filtro /rapido (IF / PLL) 00 : Europ Factory Setting.
ACL* **Automatic Colour limiting**	Factory Setting. ACL=00

VIDEO PROCESSOR LINES

CD0	84	0-FF
CD1	00	0-0F
SYN0	◀ **30**	**0-FF** ▶
SYN1	08	0-FF
DEF	00	0-0F
VI0	00	0-0F
VI1	00	0-0F
SOUND	00	0-FF
CONT0	46	0-FF
CONT1	00	0-0F
SOUND1	00	0-FF
FEAT0	00	0-01
FEAT1	00	0-01
LOCK	00	0-01
LIMIT	00	0-01

CD0 **CD1**	- Colour Decoder 0 = 84 - Colour Decoder 1 **mono sets: CD1 = 80H** **stereo sets: CD1 = 00H** Factory Setting.
SYN0 **SYN1**	- Syncronisation 0 = 30 - Syncronisation 1 = 1C Factory Setting.
DEF	- Deflection = 00 Factory Setting.
VI0 **VI1**	- Vision IF 0 = 40 - Vision IF 1 = 00 Factory Setting.
SOUND	- Sound = 00 Factory Setting.
CONT0 **CONT0**	- Control 0 = 40 - Control 1 = 00 Factory Setting.
FEAT0	- Features 0 = 00 Factory Setting.

* According to software version.

DEFAULT VALUES

OSD	DESCRIPTION	DEFAULT VALUE (HEX)
ID	Software	
INIT	Initialise TV set	
STANDARD	RF Norm Group Selection	0 (EU)
KEY	Key Lock	OFF
OSDCONTR	OSD Contrast	03
WBF-R	Timing of wide blanking	88
SOC1-0	Peak White Limiting	08
OIFS	Offset IF demodulator	20
FR	France	00
HS	Horizontal Shift	20
VS	Vertical Slope	1A
VA	Vertical Amplitude	20
SC	S-Correction	10
VSH	Vertical Shift	20
CL	Cathode Level	00
BLORS	Black Level Offset Red SECAM	8
BLORP	Black Level Offset Red PAL	8
BLOGS	Black Level Offset Green SECAM	8
BLOGP	Black Level Offset Green SECAM	8
WPRS	White Point Red SECAM	20
WPRP	White Point Red PAL	20
WPGS	White Point Green SECAM	20
WPGP	White Point Green PAL	20
WPBS	White Point Blue SECAM	20
WPBP	White Point Blue PAL	20
PWS	Peak White SECAM	20
PWP	Peak White PAL	20
BKS	Black Stretch	01
YD	Luminance Delay	08
TOP	AGC Take-Over	20
FFI	Fast Filter IF-PLL	00
ACL	Automatic Colour limiting	00
CD0	Colour Decoder 0	84
CD1	Colour Decoder 1	Mono : 80 Stereo: 00
SYN0	Synchronisation 0	30
SYN1	Synchronisation 1	1C
DEF	Deflection	00
VI0	Vision IF 0	40
VI1	Vision IF 1	00
SOUND	Sound	00
CONT0	Control 0	40
CONT1	Control 1	00
FEAT0	Features 0	00

GEOMETRY MODE ALIGNMENT

90° tube

Signal : 50 Hz - 4/3 test pattern

4 / 3 **standard mode**	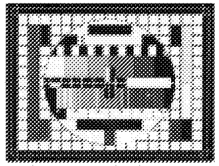	**Overscan V=107% , H=107%** 1 - Adjust Horizontal Centering (HS) 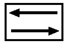 2 - Adjust Vertical centering (VSH) and Vertical amplitude 107% (VA) 3 - Adjust Vertical Slope (VS) and linearity (SC) 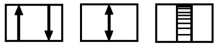 4-If necessary repeat VSH, VA alignment to 7% overscan.

110° tube

Signal : 50 Hz - 4/3 test pattern

4 / 3 **standard mode**	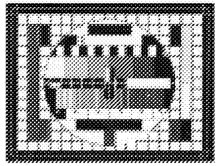	**Overscan V=107% , H=107%** **EAST-WEST MODULE** 1 - **PL140** : Turn fully counterclockwise. **MAIN BOARD** 2 - Adjust Horizontal Centering (HS) 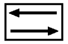 3 - Adjust Vertical centering (VSH) and Vertical amplitude 107% (VA) 4 - Adjust Vertical Slope (VS) and linearity (SC) 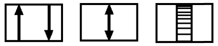 5 - If necessary repeat VSH, VA alignment to 7% overscan. **EAST-WEST MODULE** 6 - **PL140** : Adjust Horizontal amplitude with PL140 for optimum oversc 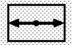 7 - **PL141** :Adjust Pincushion. 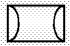 8 - **PL143** : Adjust Trapezium 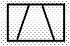 9 -If necessary repeat Horizontal amplitude, pincushion correction and trapezium alignment

LIST OF ABBREVIATIONS - LISTE DES ABREVIATIONS - ABKÜRZUNGEN
LISTA DELLE ABBREVIAZIONI - LISTA DE ABREVIACIONES

● BCL	BEAM CURRENT LIMITING INFORMATION
● BLACK_I	BLACK CURRENT INPUT
● B / B'	BLUE SIGNAL TO VIDEO AMPLIFIER
● CVBS	COMPOSITE VIDEO BASE BAND SIGNAL
● DEGAUSS	DEGAUSS SIGNAL
● DEG-COIL	DEGAUSS COIL
● FAULT	SIGNAL TO DETECT FAULT CONDITION
● FB	FAST BLANKING
● G / G'	GREEN SIGNAL TO VIDEO AMPLIFIER
● H / HDRIVE	DRIVE SIGNAL FOR HORIZONTAL DEFLECTION
● HTR / HEATER	HEATER VOLTAGE
● I_CUT	CUT OFF CURRENT
● IR	DATA FROM INFRARED RECEIVER
● MUTE	MUTE AUDIO AMPLIFIER
● OPTO	REGULATION SIGNAL GOING TO OPTO COUPLER ON DC-DC POWER SUPPLY MODULE.
● PO	POWER ON. SIGNAL FROM MICRO. TO POWER SUPPLY. SWITCHES THE POWER SUPPLY FROM STANDBY TO ON.
● R / R'	RED SIGNAL TO VIDEO AMPLIFIER
● SCL	SERIAL CLOCK
● SDA	SERIAL DATA
● SLOW_SW	SLOW SWITCH FROM SCART
● SOUND_SW	IF SELECTION CONTROL INPUT
● UA	POSITIVE AUDIO VOLTAGE
● -UA	AUDIO VOLTAGE GROUND
● USTBY	STANDBY VOLTAGE: 11.9V
● +UB / USYS	SYSTEM VOLTAGE
● USYS_MOD	SIGNAL TO MODULATE USYS
● UVIDEO	VIDEO VOLTAGE FOR THE CRT BOARD
● V _DRIVE	DRIVE SIGNAL FOR VERTICAL DEFLECTION
● +VSUPPLY	12.9V. POSITIVE SUPPLY VOLTAGE FOR VERTICAL POWER AMPLIFIER
● -VSUPPLY	10.5 TO 12.5V (DEPENDING ON TUBE TYPE). NEGATIVE SUPPLY VOLTAGE FOR VERTICAL POWER AMPLIFIER 12.9V.
● VT	TUNING VOLTAGE
● +5VON	SUPPLY VOLTAGE FOR THE MICROPROCESSOR AND AUDIO PART. ONLY PRESENT IN ON MODE.
● +8V	SUPPLY VOLTAGE FOR THE MICROPROCESSOR, AUDIO PART AND FOR THE DRIVER PULL-UP RESISTOR
● +3VUP	PRESENT IN STANDBY MODE. POWER SUPPLY VOLTAGE FOR THE MICROPROCESSOR. POWER SUPPLY INTERNAL USED AS REFERENCE VOLTAGE FOR THE REGULATION
● +33V	TUNER VOLTAGE

INTEGRATED CIRCUITS AND TRANSISTORS OUTLINE - CIRCUITS INTEGRES ET TRANSISTORS INTEGRIERTE SCHALTUNGEN UND TRANSISTOREN - CIRCUITI INTEGRATI TRANSISTOR CIRCUITOS INTEGRADOS Y TRANSISTORES

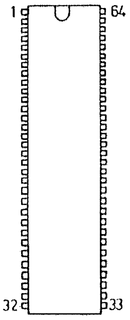

TDA9351N2
TDA9367N1

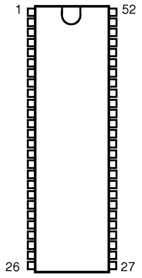

MSP3415D-P0

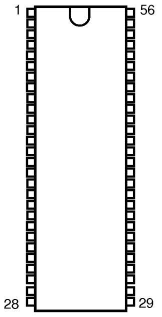

TDA8842

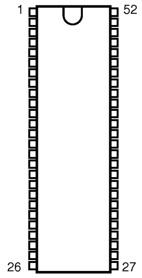

SAA5281ZP/E

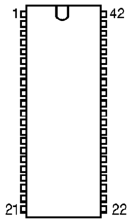

TMP47P1637VN

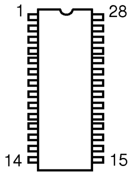

STV5348D

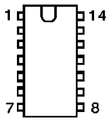

STV8225

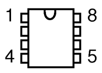

ST24W04
M22W04

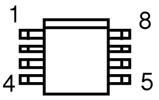

TDA 7267

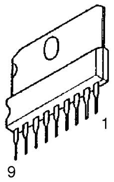

STV8130

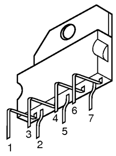

TDA9302H
TDA 9320H

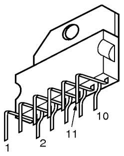

TDA7253
TDA7263

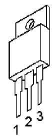

MC7805/ACT
78L09

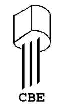

BC 337
BC337-40
BC 547B/C
BC 548B
BC 558B

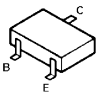

BC846B
BC 847B
BC856B
BC 858 B/C
BC857
BCR141
BCR185
DTC144EK
MMBTH10L
RN1409
RN2417

TT52
BF 422
BF423
2SA1020
2SC2236

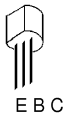

BC327

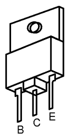

BUH515D
STP3NB90FP

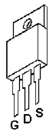

STP3 NA80F1

EACEM-IRIS REPAIR CODING SYSTEM

NDITION DE | MAIN SYMPTOM CODE | → EXTENDED SYMPTOM CODE (*1)

CONDITION
CONSTANTLY
INTERMITTENTLY
AFTER A WHILE
IN A HOT ENVIRONMENT
IN A COLD ENVIRONMENT
WHEN SWITCHING
UNDER VIBRATION
IN A DAMP/WET/RAINY/SNOWY ENVIRONMENT
IN A DRY ENVIRONMENT
AFTER BEING DROPPED/TRANSPORT DAMAGE
AFTER LIGHTNING STRIKE
ONLY CERTAIN STATIONS/SOFTWARE/MODE/CHANNELS/FREQUENCY BAND
ONLY ON CERTAIN STANDARDS
ONLY ON ONE CHANNEL
ONLY WITH CERTAIN INPUT(S)
ONLY ON CERTAIN OUTPUT(S)
IN STANDBY/OFF MODE
AT EDIT POINT
WHEN INTERCON-NECTED
LIQUID CONTAMINATION
FOR A SHORT WHILE AFTER SWITCH-ON
AFTER MAKING A COPY
UNDER STRESSED CONDITIONS / HIGH LOAD
AT SWITCH-OFF

1 GENERAL

1	NO ACTION	2	LEVEL	3	QUALITY	4	NOISE
110	POWER PROBLEM OR NOT OPERATING	120	CHARGING PROBLEM	130	DISPLAY FUNCTION PROBLEM	140	ABNORMAL NOISE
111	NO POWER	121	NO BATTERY CHARGING	131	FAULTY DISPLAY	141	CRT DISCHARGING NOISE
112	NO POWER WHEN USING AC-ADAPTER	122	INCOMPLETE BATTERY CHARGE	132	FAULTY LAMP/LED OPERATION	142	EHT DISCHARGING NOISE
113	NO POWER WHEN USING DRY BATTERIES	123	CHARGING TIME TOO LONG	133	FAULTY LEVEL METER OPERATION	143	NOISY CABINET/CRACKING TRAYS
114	NO POWER WHEN USING RECHARGEABLE BATTERIES	12X	OTHER 'CHARGING' PROBLEM	134	FAULTY ON-SCREEN DISPLAY OPERATION	144	NOISY TRANSFORMER/HUMMING
115	NO POWER FROM SOLAR CELL			135	ELECTRONIC TUNING DISPLAY FAULT	145	NOISY COMPONENT(S)
116	NO POWER WHEN USING A CAR BATTERY			136	MECHANICAL TUNING DISPLAY FAULT	146	RATTLE
117	SHORT OPERATION TIME/SHORT BATTERY LIFE			137	FAULTY TIME CODE DISPLAY	147	CLICKING
118	POWER-OFF FUNCTION NOT WORKING			138	FAULTY ALARM/ERROR DISPLAY	148	CLOCK NOISE
119	NO SWITCH-ON FROM STANDBY			139	DISPLAY DIM/TOO DARK	149	CRACKING
11A	POWERS UP, BUT NO OPERATION			13A	UNUSUAL OR INCORRECT MESSAGE IN DISPLAY	14A	WHISTLING
11B	CYCLIC POWER ON/OFF			13B	NO BACKLIGHT	14X	OTHER 'ABNORMAL' NOISE
11C	BLOWING EXTERNAL (MAINS) FUSE			13C	BEEPS, NO DISPLAY		
11D	SET SWITCHES OFF BY ITSELF			13D	WARNING LIGHT DOES NOT WORK		
11E	BACKUP BATTERY PROBLEM			13E	WARNING LIGHT LIGHTS UP		
11F	NOT OPERATING			13X	OTHER 'DISPLAY FUNCTION' PROBLEM		
11G	NO AUTOMATIC SWITCH ON/OFF						
11H	PROTECTION SWITCH/FUSE IN SET TRIGGERS						
11J	RECHARGEABLE BATTERY NOT RECOGNIZED						
11X	OTHER 'POWER' PROBLEM						

2 COMMUNICATION

1	NO ACTION	2	LEVEL	3	QUALITY	4	NOISE
210	NO RECEPTION OR CONNECTION	220	POOR RECEPTION OR CONNECTION	230	TRANSMISSION/CONNECTION PROBLEM	240	NOISY RECEPTION/TRANSMISSION
211	NO AM RECEPTION	221	POOR AM RECEPTION	231	NO TRANSMISSION/CONNECTION	241	LINE NOISE
212	NO FM RECEPTION	222	POOR FM RECEPTION	232	POOR TRANSMISSION/CONNECTION	242	OSCILLATION
213	NO SW RECEPTION	223	POOR SW RECEPTION	233	TRANSMISSION LEVEL TOO HIGH	243	INTERSTATION INTERFERENCE
214	NO VHF RECEPTION	224	POOR VHF RECEPTION	234	NO TRANSMISSION BETWEEN BASE UNIT AND HANDSET	24X	OTHER 'NOISY RECEPTION/TRANSMISSION' PROBLEM
215	NO UHF RECEPTION	225	POOR UHF RECEPTION	235	POOR TRANSMISSION BETWEEN BASE UNIT AND HANDSET		
216	NO BS RECEPTION	226	POOR BS RECEPTION	236	NO IR TRANSMISSION		
217	NO CS RECEPTION	227	POOR CS RECEPTION	237	ONE-SIDED CONNECTION		
218	NO HDTV RECEPTION	228	POOR HDTV RECEPTION	238	MODEM HANGS UP IMMEDIATELY ONCE CONNECTED		
219	NO GPS/QPS RECEPTION	229	POOR GPS/QPS RECEPTION	239	MODEM DROPS LINE DURING CONNECTION		
21A	NO RECEPTION OF DIGITAL BROADCASTING	22A	POOR RECEPTION OF DIGITAL BROADCASTING	23X	OTHER 'TRANSMISSION/CONNECTION' PROBLEM		
21B	NO IR RECEPTION	22B	POOR IR RECEPTION				
21C	NO DIAL TONE	22X	OTHER 'POOR RECEPTION' PROBLEM				
21D	NO MODEM/FAX CONNECTION						
21E	MODEM NOT ANSWERING/NO CARRIER						
21F	NO NETWORK CONNECTION/NETWORK INITIALIZATION FAILS						
21X	OTHER 'NO RECEPTION' PROBLEM						

3 PICTURE

1	NO ACTION	2	LEVEL	3	QUALITY	4	NOISE
310	NO PICTURE	320	PICTURE LEVEL PROBLEM	330	PICTURE QUALITY PROBLEM	340	PICTURE NOISE
311	NO PICTURE IN E TO E MODE	321	PICTURE TOO DARK	331	POOR PICTURE RESOLUTION	341	SNOWY PICTURE
312	NO PICTURE IN PLAYBACK MODE	322	PICTURE TOO BRIGHT	332	POOR FOCUS	342	DOT NOISE OR DROPOUT ON PICTURE
313	NO PICTURE IN VIEWFINDER	323	CONTRAST TOO LOW	333	RINGING ON PICTURE	343	NOISE BARS ON PICTURE
314	NO PICTURE, ONLY RASTER	324	CONTRAST TOO HIGH	334	EXCESSIVE SMEAR/LAG	344	BLANKING LINES ON PICTURE
315	NO RASTER, BLACK PICTURE	325	SATURATED WHITE OR BLACK LEVEL	335	POOR LINEARITY OR GEOMETRY	345	BEATING ON PICTURE
316	ONLY HORIZONTAL LINE	326	SHADING ON PICTURE	336	PICTURE SIZE INCORRECT	346	GHOSTING ON PICTURE
317	ONLY VERTICAL LINE	327	ONLY PARTIAL PICTURE	337	INCORRECT CENTRING OF PICTURE	347	VCR HEAD SWITCHING NOISE ON PICTURE
318	NO PICTURE IN LCD	32X	OTHER 'PICTURE LEVEL' PROBLEM	338	PICTURE SLANTED	348	OVERMODULATION NOISE
319	NO 2nd (OR HIGHGER) MONITOR DISPLAY			339	V-SIZE INCORRECT	349	MOIRÉ
31X	OTHER 'NO PICTURE' PROBLEM			33A	H-SIZE INCORRECT	34A	MOSAIC NOISE
				33X	OTHER 'PICTURE QUALITY' PROBLEM	34B	SCRAMBLED PICTURE
						34X	OTHER 'PICTURE NOISE' PROBLEM

4 COLOUR

1	NO ACTION	2	LEVEL	3	QUALITY	4	NOISE
410	NO COLOUR	420	COLOUR LEVEL PROBLEM	430	POOR COLOUR QUALITY	440	NOISY COLOUR
411	NO COLOUR IN E TO E MODE	421	WEAK COLOUR	431	SOME OR ALL COLOURS MISSING	441	COLOUR NOISE ON A BLACK & WHITE PICTURE
412	NO COLOUR IN PLAYBACK MODE	422	EXCESSIVE COLOUR	432	POOR WHITE BALANCE	442	COLOUR STREAKING
413	NO COLOUR IN VIEWFINDER	42X	OTHER 'COLOUR LEVEL' PROBLEM	433	HUE PROBLEM	443	COLOUR BARS ON PICTURE
414	NO COLOUR IN PART OF PICTURE			434	PURITY ERROR	44X	OTHER 'COLOUR NOISE' PROBLEM
41X	OTHER 'NO COLOUR' PROBLEM			435	LANDING ERROR/WHITE UNIFORMITY		
				436	CONVERGENCE ERROR		
				437	REGISTRATION ERROR		
				438	PITCH MOIRÉ/RAINBOW PATTERN		
				439	COLOUR SHIFT		
				43X	OTHER 'COLOUR QUALITY' PROBLEM		

5 AUDIO

1	NO ACTION	2	LEVEL	3	QUALITY	4	NOISE
510	NO AUDIO	520	AUDIO LEVEL PROBLEM	530	AUDIO QUALITY	540	NOISY AUDIO
511	NO SOUND IN E TO E MODE	521	LOW AUDIO LEVEL	531	POOR FREQUENCY RESPONSE	541	HUM
512	NO PLAYBACK OF OUTGOING MESSAGE(S)	522	EXCESSIVE AUDIO LEVEL	532	DISTORTED AUDIO	542	HISS
513	NO PLAYBACK OF INCOMING MESSAGE(S)	523	BALANCE PROBLEM	533	NO OR POOR TREBLE	543	CROSSTALK
514	NO AUDIO PLAYBACK	524	FADER PROBLEM	534	NO OR POOR BASS	544	STATIC, POP OR CLICK NOISE
515	NO SOUND FROM HANDSET	525	AUDIO LEVEL REMAINING/NO MUTING	535	EARPHONE/HEADPHONE AUDIO POOR	545	BUZZ
516	NO SOUND FROM SPEAKER	52X	OTHER 'AUDIO LEVEL' PROBLEM	53X	OTHER 'AUDIO QUALITY' PROBLEM	546	SCRATCHING NOISE
517	NO SOUND FROM EARPHONE/HEADPHONE					547	IGNITION NOISE
518	NO MICROPHONE SOUND					548	WHISTLING/MULTIPATH NOISE
519	NO SOUND FROM DIGITAL OUTPUT					549	DATA/DIGITAL NOISE
51X	OTHER 'NO AUDIO' PROBLEM					54X	OTHER 'AUDIO NOISE' PROBLEM

6 MECHANISM

1	NO ACTION	2	LEVEL	3	QUALITY	4	NOISE
610	NO MECHANICAL OPERATION	620	IRREGULAR MECHANICAL OPERATION	630	SPEED PROBLEM	640	MECHANICAL NOISE
611	NO ROTATION OF MOTOR/DISC	621	IRREGULAR ROTATION	631	SPEED TOO FAST	641	ROTATION NOISE/DRUM NOISE
612	NO FORWARD OPERATION	622	IRREGULAR FORWARD MODE	632	SPEED TOO SLOW	642	MOTOR NOISE
613	NO REVERSE OPERATION	623	IRREGULAR REVERSE OPERATION	633	SPEED UNADJUSTABLE	643	WIND/AIR NOISE
614	NO FAST FORWARD OR REWIND FUNCTION	624	IRREGULAR FAST FORWARD OR REWIND FUNCTION	63X	OTHER 'SPEED' PROBLEM	644	SQUEALING
615	NO LOADING	625	IRREGULAR LOADING OF MEDIA			645	FAN NOISE
616	NO UNLOADING OR EJECTING	626	IRREGULAR UNLOADING OR EJECTING			646	DISC SCRAPING
617	NO AUTO SHUT-OFF OPERATION	627	IRREGULAR AUTO SHUT-OFF OPERATION			647	NOISY TAPE LOADING
618	TONEARM DOES NOT MOVE	628	IRREGULAR TONEARM MOVEMENT			648	GEAR NOISE
619	DISC NOT BEING EJECTED	629	IRREGULAR EJECTION OF DISC			649	CONTROL OR SWITCH NOISY
61A	MAGAZINE OR MODULE LOADING/UNLOADING	62A	IRREGULAR DIRECTION CHANGE			64A	GRINDING
61B	CONTROL/SWITCH NOT WORKING	62B	FAULTY DISC CHANGE OPERATION			64B	RUMBLING
61X	OTHER 'NO MECHANICAL OPERATION' PROBLEM	62X	OTHER 'IRREGULAR MECHANICAL OPERATION' PROBLEM			64C	VIBRATION NOISE
						64X	OTHER 'MECHANICAL NOISE' PROBLEM

7 DATA PROCESSING

1	NO ACTION	2	LEVEL	3	QUALITY	4	NOISE
710	NO DATA PROCESSING OPERATION	720	FAULTY DATA PROCESSING OPERATION	730	DATA DISPLAY PROBLEM	740	KEYBOARD/POINTING DEVICE
711	NO INITIAL SCREEN	721	INCORRECT DATA	731	INCORRECT CHARACTER DISPLAY	741	MOUSE/TRACKBALL/TRACKPAD NOT WORKING
712	SYSTEM DOES NOT RESET	722	SYSTEM RESET WHILE BEING USED	732	MISSING DISPLAY CHARACTERS	742	KEYBOARD LOCKS UP
713	SYSTEM DOES NOT BOOT UP	723	SYSTEM LOCKS OUT/CRASHES/HANGS	733	FAULTY GRAPHIC DISPLAY	743	POINTING DEVICE LOCKS UP
714	NO OPERATION FROM PLUG-IN MODULE/PERIPHERAL	724	FAULTY OPERATION OF PLUG-IN MODULE	734	FAULTY SWITCHING BETWEEN GRAPHIC/CHARACTER MODE	744	STICKY KEY(S)
715	NO KEYBOARD OPERATION	725	FAULTY KEYBOARD OPERATION	735	FAULTY PROMPT/CURSOR OPERATION	745	INOPERATIVE KEY(S)
716	NO OPERATION FROM OTHER INPUT/OUTPUT DEVICE	726	FAULTY OPERATION OF OTHER INPUT/OUTPUT DEVICE	736	DATA DISPLAY COLOUR INCORRECT	746	POINTING DEVICE NOT TRACKING PROPERLY
717	NO DATA STORAGE OPERATION	727	FAULTY DATA STORAGE OPERATION	737	NO PAGING OR SCROLL MODE	747	POINTING DEVICE JITTERY
718	NO DATA COMMUNICATION	728	FAULTY DATA COMMUNICATION	73X	OTHER 'DATA DISPLAY' PROBLEM	748	LEFT- OR RIGHT CLICK BUTTON INOPERATIONAL
719	ERROR MESSAGE DISPLAY	729	MEMORY ERROR			749	TRACKPAD SURFACE DAMAGED
71A	HDD BOOT FAILURE	72A	REQUIRES 'SET UP' AT BOOTING			74A	KEYBOARD KEY(S) DAMAGED
71B	FDD BOOT FAILURE	72X	OTHER 'FAULTY DATA PROCESSING' PROBLEM			74X	OTHER KEYBOARD/POINTING DEVICE PROBLEM
71X	OTHER 'NO DATA PROCESSING' PROBLEM						

8 PRINT/COPY/SCAN

1	NO ACTION	2	LEVEL	3	QUALITY	4	NOISE
810	NO PRINT/COPY/SCAN OPERATION	820	ERRONEOUS PRINT/COPY/SCAN OPERATION	830	POOR PRINT QUALITY	840	NOISY PRINTING
811	NOT PRINTING	821	PRINT IMAGE REVERSED (NEGATIVE/POSITIVE)	831	INCORRECT PRINTING POSITION	841	PRINTING NOISE LINES
812	NO COMMUNICATION WITH PRINTER	822	IRREGULAR PAPER FEED	832	LOW PRINT CONTRAST	842	DIRTY PRINTING
813	PAPER NOT LOADING	823	ERRONEOUS PRINT MODE SWITCHING	833	EXCESSIVE PRINT CONTRAST	843	UNPLEASANT SMELL (OZONE)
814	NO PAPER FEED	824	COPY TOO DARK	834	BLURRED PRINT IMAGE	844	BLACK LINES/STRIPES IN FEED DIRECTION
815	NO IMAGE FIXATION	825	COPY TOO BRIGHT	835	PRINT IMAGE NOT SHARP	845	WHITE LINES/STRIPES IN FEED DIRECTION
816	NO DOCUMENT FEEDING	826	BLACK COPY	836	DOTS MISSING IN PRINT IMAGE	846	BLACK LINES/STRIPES ACROSS FEED DIRECTION
817	SCANNER NOT WORKING	827	WHITE COPY	837	COLOUR STREAKING	847	WHITE LINES/STRIPES ACROSS FEED DIRECTION
81X	OTHER 'NO PRINT/COPY/SCAN OPERATION' PROBLEM	828	POOR COLOUR LEVELS	838	NO COLOUR IN PART OF PICTURE	84X	OTHER 'NOISY PRINTING' PROBLEM
		829	IRREGULAR DOCUMENT FEED	839	PRINT IMAGE/COPY INCOMPLETE		
		82A	FAULTY CORRECTION FUNCTION	83A	FAULTY CALIBRATION		
		82B	POOR SCANNING QUALITY	83X	OTHER 'PRINT QUALITY' PROBLEM		
		82X	OTHER 'PRINT/COPY/SCAN OPERATION' PROBLEM				

(*1)

AUTION

HE 'X' EXTENDED YMPTOM CODES *-**X) SHOULD NLY BE USED TO NDICATE THAT A UITABLE YMPTOM ESCRIPTION IS OT AVAILABLE N THE ONCERNED YMPTOM GROUP

SYMPTOM CODE TABLE

EACEM

5	UNSTABLE
150	**REMOTE CONTROL PROBLEM**
151	NO REMOTE CONTROL OPERATION
152	INCORRECT REMOTE CONTROL OPERATION
153	REMOTE CONTROL PROGRAMMING/ LEARNING MODE PROBLEM
154	POOR REMOTE CONTROL SENSITIVITY
15X	OTHER 'REMOTE CONTROL' PROBLEM
250	**UNSTABLE RECEPTION/TRANSMISSION**
251	TUNING DRIFT
252	FADING
253	INTERMITTENT LINE/LINE BREAKING OFF
254	NO OR UNSTABLE CONNECTION COMBINED WITH 'WEAK SIGNAL STRENGTH' INDICATION
25X	OTHER 'UNSTABLE RECEPTION/ TRANSMISSION' PROBLEM
350	**UNSTABLE PICTURE**
351	SYNC PROBLEM
352	PICTURE PUMPING
353	PICTURE JITTER
354	PICTURE SHAKING (HORIZONTAL OR VERTICAL)
355	FLICKERING PICTURE
356	FLASHING PICTURE
357	CYCLIC PICTURE MUTING
358	HEAD IMPACT ERROR CAUSING UNSTABLE PICTURE
359	VCR SKEW/H-SHIFT ERROR
35A	FROZEN PICTURE
35B	JUMPING/REPEATING PICTURE
35X	OTHER 'UNSTABLE PICTURE' PROBLEM
450	**UNSTABLE COLOUR**
451	COLOUR FLASHING
452	HUE CONSTANTLY CHANGING
453	FLICKERING COLOUR
454	COLOUR NOT LOCKED
45X	OTHER 'UNSTABLE COLOUR' PROBLEM
550	**UNSTABLE AUDIO**
551	JUMPING OR REPEATING AUDIO
552	AUDIO PUMPING OR BREATHING
553	AUDIO DROPOUTS
554	CYCLIC AUDIO MUTING
555	WOW AND FLUTTER
556	HOWLING/ACOUSTIC FEEDBACK
557	ECHO IN SOUND
55X	OTHER 'UNSTABLE AUDIO' PROBLEM
650	**MECHANICAL INSTABILITY**
651	UNEVEN FEET
652	FAULTY HINGE
653	VIBRATING/JUMPING
654	PARTS LOOSE
655	DAMAGED WHEEL(S)
65X	OTHER 'MECHANICAL INSTABILITY' PROBLEM
750	**PERIPHERAL PROBLEM (NON-STORAGE)**
751	PERIPHERAL DOES NOT INITIALISE
752	COMMUNICATION FAILURE WITH PERIPHERAL
753	INTERNAL PERIPHERALS FAILURE
754	EXTERNAL PERIPHERALS FAILURE
755	NETWORK CARD ERROR
756	PERIPHERAL FAILS SELF TEST
75X	OTHER PERIPHERAL PROBLEM
850	**UNSTABLE PRINTER OPERATION**
851	UNSTABLE PAPER LOADING
852	UNSTABLE MULTI-PAPER LOADING
853	INCORRECT LINE-UP OF CHARACTERS
85X	OTHER 'UNSTABLE PRINTER OPERATION' PROBLEM

6	RECORDING & PHYSICAL PROBLEMS
160	**PHYSICAL DAMAGE**
161	DAMAGED/DEFORMED CABINET/PANEL
162	DAMAGED HANDLE/CLIP
163	DAMAGED CONTROL KNOB(S)/BUTTON(S)/KEYPAD
164	DAMAGED DOOR/COVER
165	DAMAGED SEAL
166	DAMAGED PLUG/SOCKET/TERMINAL/CONNECTOR
167	DAMAGED LENS
168	DAMAGED CARTRIDGE OR STYLUS
169	DAMAGED ANTENNA
16A	DAMAGED CRT OR VIEWFINDER/LCD DISPLAY
16B	MISSING COMPONENT(S) OR ORNAMENTAL PARTS
16C	PRINTED MARKINGS ERASED/PEELED OFF
16D	SET BURNING/EMITS SMOKE
16E	EXTERNAL SURFACE DAMAGE (BUBBLING/PEELING/RUSTING/SCRATCHED)
16F	SMELL
16G	WEAK/DAMAGED STAND
16H	DAMAGED SPEAKER
16J	SET GETS VERY HOT / PARTS MELTING
16K	FOREIGN SUBSTANCE ON/IN UNIT
16L	BURNING MARKS
16M	INTERNAL SURFACE DAMAGE (BUBBLING/PEELING/RUSTING/SCRATCHED)
16N	DAMAGED POWER CABLE
16P	DAMAGED ACCESSORY
16R	DISCOLOURATION
16X	OTHER PHYSICAL DAMAGE
260	**TUNING PROBLEM**
261	MANUAL TUNING PROBLEM
262	AUTOMATIC TUNING PROBLEM
263	INCORRECT TUNING
264	TUNING MEMORY PROBLEM
26X	OTHER 'TUNING' PROBLEM
360	**POOR PICTURE RECORDING**
361	NO PICTURE RECORDING
362	NO ERASURE PROTECTION FOR VIDEO
363	PREVIOUS VIDEO RECORDING NOT BEING ERASED
364	UNWANTED ERASURE OF PICTURE
365	NO CAMERA RECORDING
366	ONLY ONE FIELD PER FRAME BEING RECORDED
367	RECORDS ONLY A FEW PICTURES
36X	OTHER 'PICTURE RECORDING' PROBLEM
460	**POOR COLOUR RECORDING**
461	NO COLOUR RECORDING
462	NOISY COLOUR RECORDING
46X	OTHER 'COLOUR RECORDING' PROBLEM
560	**POOR AUDIO RECORDING**
561	AUDIO NOT BEING RECORDED
562	NO ERASURE PROTECTION FOR AUDIO
563	PREVIOUS AUDIO RECORDING NOT BEING ERASED
564	UNWANTED ERASURE OF AUDIO
565	MESSAGE NOT BEING RECORDED
566	DISTORTED AUDIO RECORDING
56X	OTHER 'AUDIO RECORDING' PROBLEM
660	**DAMAGE TO MEDIA**
661	TAPE GETS SCRATCHED
662	DISC GETS SCRATCHED
663	TAPE GETS CHEWED/WRINKLED
664	TAPE JAMMED OR BROKEN
665	TAPE GETS CURLED
666	SLACK TAPE
667	TAPE STICKING
66X	OTHER 'SOFTWARE DAMAGE' PROBLEM
760	**DATA STORAGE PROBLEM**
761	FORMATTING PROBLEM
762	DATA ON STORAGE MEDIUM BEING LOST
763	FRAME MEMORY PROBLEM
764	READ/WRITE ERRORS
765	HARD- OR OPTICAL DRIVE PROBLEM
766	FLOPPY DRIVE PROBLEM
767	CD/DVD-ROM DRIVE PROBLEM
768	TAPE PROBLEM
769	DRIVE WILL NOT MOUNT/CANNOT ACCESS DRIVE
76A	DISCS EXCHANGE PROBLEM
76B	READ/WRITE OPERATION VERY SLOW
76X	OTHER 'DATA READ/WRITE' PROBLEM
860	**RIBBON/PAPER PROBLEMS**
861	RIBBON BROKEN
862	RIBBON STUCK/STICKING
863	RIBBON DERAILED
864	PAPER STUCK/STICKING TO MECHANISM
865	PAPER JAM
866	DOCUMENT JAM
867	ERRONEOUS 'NO INKT/TONER' MESSAGE
86X	OTHER 'RIBBON/PAPER' PROBLEM

7	SPECIAL FUNCTIONS
170	**GENERAL FUNCTION PROBLEM**
171	FAULTY CLOCK FUNCTION
172	FAULTY SLEEP FUNCTION
173	FAULTY TIMER PROGRAMMING
174	FAULTY TIMER OPERATION
175	PROGRAMMING/USER ADJUSTMENT PROBLEM
176	FAULTY RECORD MUTE OPERATION
177	FAULTY PROGRAMMED PLAYBACK OPERATION
178	FAULTY MEMORY FUNCTION
179	FAULTY INPUT SWITCHING
17A	FAULTY OUTPUT SWITCHING
17B	ELECTRIC SHOCK/STATIC DISCHARGE
17C	FAULTY SEARCH FUNCTION (INDEX/VIEW/TITLE/CHAPTER/TRACK...)
17D	WRONG LANGUAGE/CHARACTER SET
17E	ERROR CODE APPEARS IN DISPLAY
17F	SWITCH NOT OPERATING
17G	PEDAL NOT OPERATING
17H	FAULTY STANDBY MODE
17J	FAULTY HIBERNATION MODE
17K	NO AUDIBLE WARNING SIGNAL
17L	FAULTY OPERATION OF PARENTAL LOCK/KEYLOCK FUNCTION
17M	FAULTY MODE SWITCHING
17N	MENU FUNCTION PROBLEM
17X	OTHER 'GENERAL FUNCTION' PROBLEM
270	**SPECIAL COMMUNICATION PROBLEM**
271	FAULTY DIALLING
272	FAULTY CHANNEL SELECTION
273	FAULTY AUTO-ANSWER OPERATION
274	FAULTY MESSAGE READ-OUT FUNCTION
275	FAULTY AUTODIAL/REDIAL MEMORY
276	FAULTY SPEECH PROCESSING
277	NO RINGING TONE
278	LOUD/WEAK RINGING TONE
279	MODEM STUCK OFF HOOK
27A	FAX DOES NOT WORK PROPERLY
27B	MODEM CAUSES PROBLEM WITH PHONE
27C	NO MODEM DIAL TONE
27X	OTHER 'SPECIAL COMMUNICATION' PROBLEM
370	**SPECIAL PICTURE FUNCTION PROBLEM**
371	EDITING PROBLEM
372	FAULTY FADING/WIPER OPERATION
373	FAULTY NEGATIVE/POSITIVE SWITCHING FUNCTION
374	FAULTY SUPERIMPOSE/TELOP OPERATION
375	FAULTY PICTURE IN PICTURE/DIGITAL PICTURE OPERATION
376	FAULTY PICTURE TRANSMISSION
377	FAULTY DIGITAL SHUTTER FUNCTION
378	FAULTY GENLOCK FUNCTION
379	FAULTY FLASH/STROBE FUNCTION
37A	FAULTY DIGITAL PICTURE/ZOOMING FUNCTION
37B	FAULTY AUTO-EDIT FUNCTION
37C	FAULTY PICTURE STABILIZER FUNCTION
37D	FAULTY PICTURE CAPTURE FUNCTION
37E	FAULTY SUBTITLING FUNCTION
37F	FAULTY VARIABLE SPEED PLAYBACK
37G	FAULTY VIEW-/MULTI-ANGLE SWITCHING
37H	FAULTY ASPECT RATIO SWITCHING
37J	THUMBNAIL- OR INDEX PICTURE PROBLEM
37K	NO BLANKING SCREEN
37X	OTHER 'SPECIAL PICTURE FUNCTION' PROBLEM
470	**SPECIAL COLOUR FUNCTION PROBLEM**
471	FAULTY AUTOMATIC WHITE BALANCE
472	FAULTY COLOUR EFFECTS FUNCTION
47X	OTHER 'SPECIAL COLOUR FUNCTION" PROBLEM
570	**POOR SPECIAL AUDIO FUNCTION**
571	FAULTY FADE OPERATION
572	FAULTY ECHO OPERATION
573	FAULTY MIXING OPERATION
574	FAULTY REPEAT MODE OPERATION
575	FAULTY AUDIO PROCESSING
576	FAULTY SYNC RECORDING OPERATION
577	FAULTY DBB/DOL OPERATION
578	FAULTY NOISE REDUCTION OPERATION
579	FAULTY AUDIO DUB FUNCTION
57A	FAULTY TITLE PROGRAMMING
57B	FAULTY MIC CONTROL
57C	FAULTY PITCH CONTROL
57X	OTHER 'SPECIAL AUDIO FUNCTION' PROBLEM
670	**MECHANICAL OPERATION PROBLEM**
671	FAULTY START/STOP OPERATION
672	FAULTY PAUSE OPERATION
673	FAULTY AUTOMATIC PROGRAM SEARCH
674	FAULTY CUE/REVIEW MODE
675	FAULTY SLOW MOTION OPERATION
676	FAULTY HIGH-SPEED SCANNING MODE
677	FAULTY SPEED COPY FUNCTION
678	FAULTY REPEAT OPERATION
679	FAULTY RECORD REVIEW MODE
67A	FAULTY AMS OPERATION
67B	AUTO-REVERSE MALFUNCTION
67C	FAULTY END DETECTION
67D	FAULTY DISC SIDE (A-B SELECT) SWITCHING
67X	OTHER 'MECHANICAL OPERATION' PROBLEM
770	**SPECIAL DATA PROCESSING FUNCTION PROBLEM**
771	FAULTY SELF-DIAGNOSTIC MODE
772	FAULTY WORD PROCESSING FUNCTION
773	FAULTY GRAPHIC EDIT FUNCTION
774	PROGRAM CANNOT BE INSTALLED
775	PRE-LOADED PROGRAM CANNOT BE STARTED UP
776	NOT PRE-LOADED PROGRAM CANNOT BE STARTED UP
777	VIRUS ALARM
77X	OTHER 'SPECIAL DATA FUNCTION' PROBLEM
870	

8	OTHER CONDITIONS
180	**SPECIAL REQUIREMENTS**
181	TEST AND CHECK
182	GENERAL OVERHAUL
183	SYSTEM/FREQUENCY CONVERSION
184	INITIAL SETUP/INSTALLATION REQUES
185	MODIFICATION/CIRCUIT/INSTALLATION CHANGE
186	WRONG PRODUCT IN CARTON
187	ACCESSORY MISSING
188	UNABLE TO CONNECT PARTS/-TO ASSEMBLE
189	WRONG COLOUR
18B	BATTERY MOUNTING PROBLEM
18X	OTHER SPECIAL REQUIREMENTS
18Z	SYMPTOM NOT AVAILABLE
280	**SPECIAL RECEPTION PROBLEM**
281	FAULTY STEREO RECEPTION
282	FAULTY MAIN CHANNEL (A) FUNCTION
283	FAULTY SUB-CHANNEL (B) FUNCTION
284	FAULTY SSB RECEPTION
285	FAULTY RDS/VPS/PDC/XDS OPERATIO
286	FAULTY TELETEXT/CLOSE CAPTION/EP RECEPTION
287	FAULTY SATELLITE/RTTY RECEPTION
288	FAULTY FAX OPERATION
289	MODEM NOT RECOGNIZED BY SYSTEM
28A	FAULTY CALL CHARGE DISPLAY
28B	FAULTY HANDS-FREE OPERATION
28C	SET LOCKED
28X	OTHER 'SPECIAL RECEPTION' PROBLE
380	**PICTURE DISPLAY/PICKUP PROBLE**
381	BURN MARK ON DISPLAY/PICKUP
382	SCRATCH ON DISPLAY/PICKUP
383	DUST/DIRT ON DISPLAY/PICKUP
384	PHOSPHOR/PIXEL MISSING ON DISPLAY/PICKUP
385	BRIGHT POINT(S) IN PHOSPHOR/PIXE
386	LINES ACROSS/DOWN IMAGE
387	OUT OF SPECS PIXEL DEFAULTS
388	BACKGROUND BURNT IN
38X	OTHER 'PICTURE DISPLAY/PICKUP' PROBLEM
480	
580	**STEREO/MULTI MODE OPERATION PROBLEM**
581	NO STEREO OPERATION
582	POOR CHANNEL SEPARATION
583	DIFFERENCE IN PHASE BETWEEN CHANNELS
584	PROBLEM WITH SURROUND SOUND M
585	PROBLEM WITH PCM AUDIO MODE
58X	OTHER 'STEREO/MULTI MODE' PROBL
680	**LENS PROBLEM**
681	FOCUS PROBLEM
682	ZOOM PROBLEM
683	IRIS PROBLEM
684	MACRO PROBLEM
68X	OTHER 'LENS' PROBLEM
780	**INTERFACE PROBLEM**
781	USB INTERFACE PROBLEM
782	PARALLEL INTERFACE PROBLEM
783	SCSI INTERFACE PROBLEM
784	SERIAL INTERFACE PROBLEM
785	INCOMPATIBLE WITH OTHER SYSTEMS
786	AUDIO/VIDEO INTERFACE PROBLEM
787	i.LINK/FIREWIRE/IEEE1394 INTERFACE PROBLEM
78X	OTHER 'INTERFACE' PROBLEM
880	**FAULTY FONT/CHARACTER FUNCTI**
881	INCORRECT CHARACTERS OR IMAGE
882	INCORRECT CHARACTER SIZE
883	FONT LOADING PROBLEM
88X	OTHER 'FAULTY FONT/CHARACTER FUNCTION' PROBLEM

EACEM - SECTION CODES

COMMON	
ANT	ANTENNA SECTION
APR	SIGNAL PROCESSING (ANALOG)
BCH	BATTERY CHARGE
CLK	CLOCK/TIMER SECTION
CPA	COLOUR PROCESSING/ANALOG
CTR	CONTROL PANEL
DPR	SIGNAL PROCESSING (DIGITAL)
ERA	ERASE CIRCUIT
FLX	FLEXIBLE PRINTED CIRCUIT BOARD
HFS	HIGH FREQUENCY SECTION (RF)
IDS	INFORMATION DISPLAY SECTION
IFC	IF-CIRCUIT
ILN	i.LINK (IEEE1394) SECTION
INP	SIGNAL INPUT SECTION
IRD	INFRARED (IrDA) SECTION
MEM	MEMORY CIRCUIT
OUT	SIGNAL OUTPUT SECTION
PRG	PROGRAMMING SECTION
PRT	PROTECTION CIRCUIT
PSU	POWER SUPPLY
PWA	POWER AMP SECTION
REM	REMOTE CONTROL SECTION
RFU	BOOSTER,RF UNIT
SFT	SOFTWARE (TAPE, DISC, ETC.)
SNS	SENSOR UNIT
SVO	SERVO SECTION
SYS	SYSTEM CONTROL SECTION
TUN	TUNING SECTION
TXT	TEXT PROCESSING

SOUND-RELATED	
APA	AUDIO PROCESSING/ANALOG
APD	AUDIO PROCESSING/DIGITAL
CDC	CD CHANGER SECTION
CDS	CD SECTION
MDC	MD CHANGER SECTION
MDS	MINIDISC SECTION
MIC	MICROPHONE SECTION
PUD	PICK-UP DEVICE
SHD	STATIONARY HEAD(S)
SPK	SPEAKER

PICTURE-RELATED	
CAM	CAMERA CIRCUIT
CPD	COLOUR PROCESSING/DIGITAL
CRT	PICTURE TUBE
DFL	DEFLECTION CIRCUIT
DVD	DVD SECTION
FPK	FOCUS PACK
IMG	IMAGE DISPLAY UNIT

PICTURE-RELATED	
LCD	LCD SECTION
LMP	LAMP/FLASH SECTION
VPA	VIDEO PROCESSING/ANALOG
VPD	VIDEO PROCESSING/DIGITAL
VWF	VIEWFINDER

PC-RELATED	
FDD	FLOPPY DISC DRIVE
FMW	FIRMWARE
HDD	HARD DISC DRIVE
ISA	ISA SECTION
JST	JOYSTICK
KBD	KEYBOARD (SEPARATE)
MDM	MODEM SECTION
NIF	NETWORK INTERFACE
PAR	PARALLEL PORT
PCC	PC CARD
PCI	PCI SECTION
SCS	SCSI PORT
SER	SERIAL PORT
USB	USB PORT

MECHANICAL	
ARM	ARM MECHANISM
BZL	BEZEL
CBT	CABINET
CHA	CHASSIS
DDM	DISC DRIVE MECHANISM
EXC	EXTERNAL CONNECTOR
HCM	HEAD CARRIAGE MECHANISM
HOL	CASSETTE HOLDER
INC	INTERNAL CONNECTOR
LDG	LOADING MECHANISM
LNM	LENS MECHANISM
PFM	PAPER FEED MECHANISM
PIN	PINCH ROLLER/LEVER
PRI	PRINT BLOCK
RFM	RIBBON FEED MECHANISM
RHD	ROTARY HEAD(S)
SLD	SLED MECHANISM
SRS	SUPPLY REEL SECTION
STA	STATIC BLOCK
TDM	TAPE DRIVE MECHANISM
THR	THREADING MECHANISM
TNR	TENSION REGULATOR
TPT	TAPE PATH
TRS	TAKE-UP REEL SECTION
WIR	LEAD WIRE
XXX	CABINET/COSMETIC PARTS

EXAMPLE OF USE:

FLAG	SYMPTOM CODE	PART NO.	REF. NO.	SECTION	PCB	DEFECT CODE	REPAIR CODE	QTY
1	1 4 1 2	1 1 1 1 1 1 1 1 1 1 1 1 1 1 1 1	R 1 2 3	T D M	Y A 2 2 . . .	C 1	Z 1	. .
.	3 6 4 1	3 4 5 6 7 8 9 X X X X X X X X X	1 1 1					. .

FLAG: INDICATES THE ONE MAJOR SYMPTOM/PART COMBINATION BY ‘1’

DEFECT CODES

MECHANICAL	
A	WORN OUT (OR GENERAL MECHANICAL DEFECT)
A1	MISOPERATING
B	DIRTY, CLOGGED
C	MECHANICALLY MISALIGNED
D	CUT, BROKEN
E	DEFORMED
F	SNAPPED
G	SCRATCHED, DENTED, SHARP EDGES
H	CRACKED, PEELED, CORRODED, MELTED
I	LOOSE/OFF/STRIPPED
J	SHAKY, UNSTABLE
K	LEAKING (MECHANICAL)
L	DRY (NO LUBRICANT)
M	FOREIGN OBJECT

ELECTRICAL	
N	DEFECTIVE ELECTRICAL COMPONENT/MODULE
O	BURNT, ARCING, MISSING PIXELS
P	ELECTRICALLY MISALIGNED/WRONG SETTING
Q	SHORT CIRCUIT
R	OPEN CIRCUIT
S	LEAKING (ELECTRICAL)
T	BAD CONTACT, CONNECTION
T1	BAD EARTH CONNECTION
U	OPEN PATTERN
V	CRACKED PRINTED CIRCUIT BOARD
W	COLD OR NO SOLDERING
X	BRIDGED SOLDERING
Y	WRONG COMPONENT/MODULE
Z	MISSING COMPONENT/MODULE
1	SOFTWARE PROBLEM
11	LOSING DATA FROM MEMORY
12	FAULTY PROGRAM SETTING/INSTALLATION
13	SOFTWARE DEFECTIVE OR INCOMPLETE
14	SOFTWARE SETUP PROBLEM
15	NO IDENTIFICATION / AUTHENTICATION OF PRODUCT OR USER
2	EXHAUSTED, LOW EMISSION
3	NO PROBLEM FOUND (SET WITHIN SPEC)
4	NO PROBLEM FOUND - CUSTOMER MISUNDERSTANDING
5	NO PROBLEM FOUND - LOCAL CONDITIONS
51	FAULTY MAINS VOLTAGE
6	UNABLE TO DIAGNOSE FAULT
7	INCORRECTLY WIRED/ASSEMBLED
81	INCORRECT EQUIPMENT CONNECTION
9	CUSTOMER MISUSE
93	UNAUTHORISED MODIFICATION

REPAIR CODES

A	REPLACEMENT
B	MECHANICAL ALIGNMENT
C	ELECTRICAL ALIGNMENT
D	RESOLDERING
D1	REFITTING, PUT BACK IN POSITION (CONNECTOR, TUBE...)
E	CLEANING
F	LUBRICATION
G	REPAIRED ELECTRICAL PARTS
H	REPAIRED MECHANICAL PARTS
I	MODIFICATION REQUESTED BY MANUFACTURER
J	REMOVED
K	ADDED
L	FUNCTIONAL CHECK
M	SPECIFICATION MEASUREMENT
N	MAINTENANCE
O	REFURBISHING, RECONDITIONING
P	PREVENTIVE PARTS REPLACEMENT

Q	PREVENTIVE ACTION WITHOUT PARTS REPLACEMENT
U	EXPLANATION FOR CUSTOMER
V	COST ESTIMATION REFUSED
W	COST ESTIMATION WITH PARTS
X	COST ESTIMATION WITHOUT PARTS
Y	RETURN WITHOUT REPAIR
Z	PRODUCT EXCHANGE
Z1	PRODUCT EXCHANGE (REPAIR TOO EXPENSIVE)
Z2	PRODUCT EXCHANGE (TOO MANY VISITS/REPAIRS)
Z3	PRODUCT EXCHANGE (PARTS NOT AVAILABLE)
Z4	PRODUCT EXCHANGE (IMPOSSIBLE TO REPAIR)
Z5	PRODUCT EXCHANGE (ON REQUEST OF RETAILER)
Z6	PRODUCT EXCHANGE (ON REQUEST OF MANUFACTURER)
1	SOFTWARE CORRECTION/RESET
2	SOFTWARE UPGRADE
3	PRODUCT UPGRADE (ON REQUEST)

INTEGRATED CIRCUITS BLOCK DIAGRAMS - SYNOPTIQUES INTERNES DES CIRCUITS INTEGRES - INTEGRIERTE SCHALTUNGEN BLOCKSCHALTBILDER - SCHEMA A BLOCCHI DEL CIRCUITI INTEGRATI - VISTA INTERNA DE LOS CIRCUITOS INTEGRADOS

TDA9351N1 MICROPROCESSOR

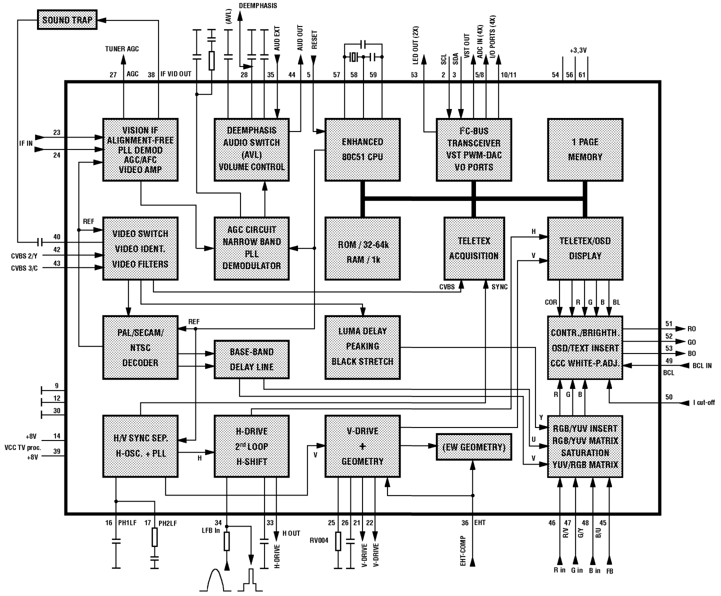

TDA9367N1 MICROPROCESSOR

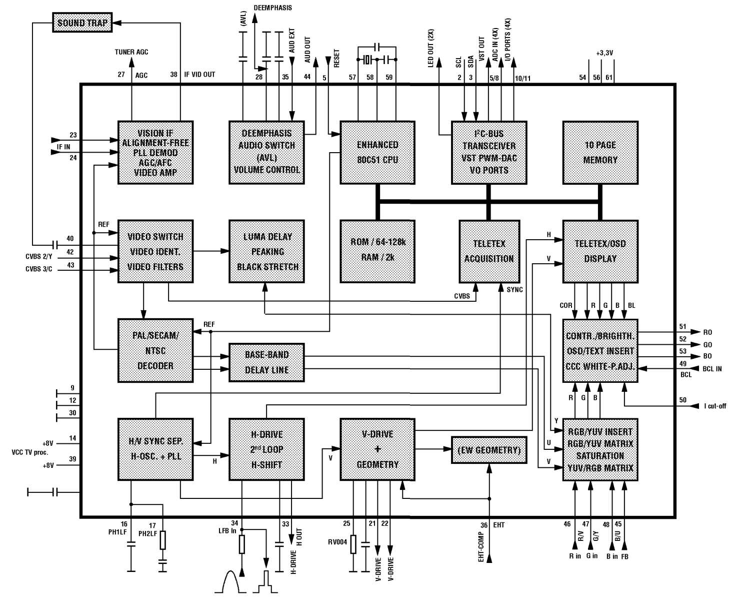

MSP 3415D

MULTISTANDARD SOUND PROCESSOR

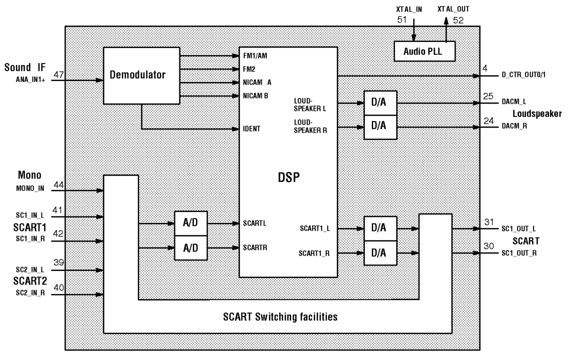

AUDIO BASEBAND PROCESSING

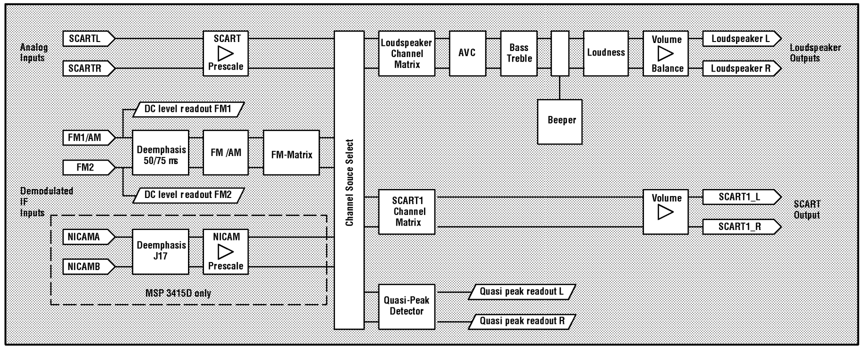

DETECTION PART OF THE MSP3415D

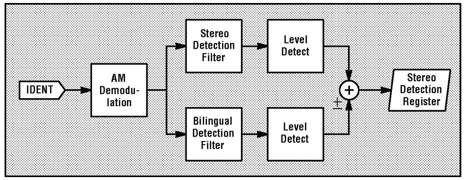

LOGIC CONTROL II20 - IV01

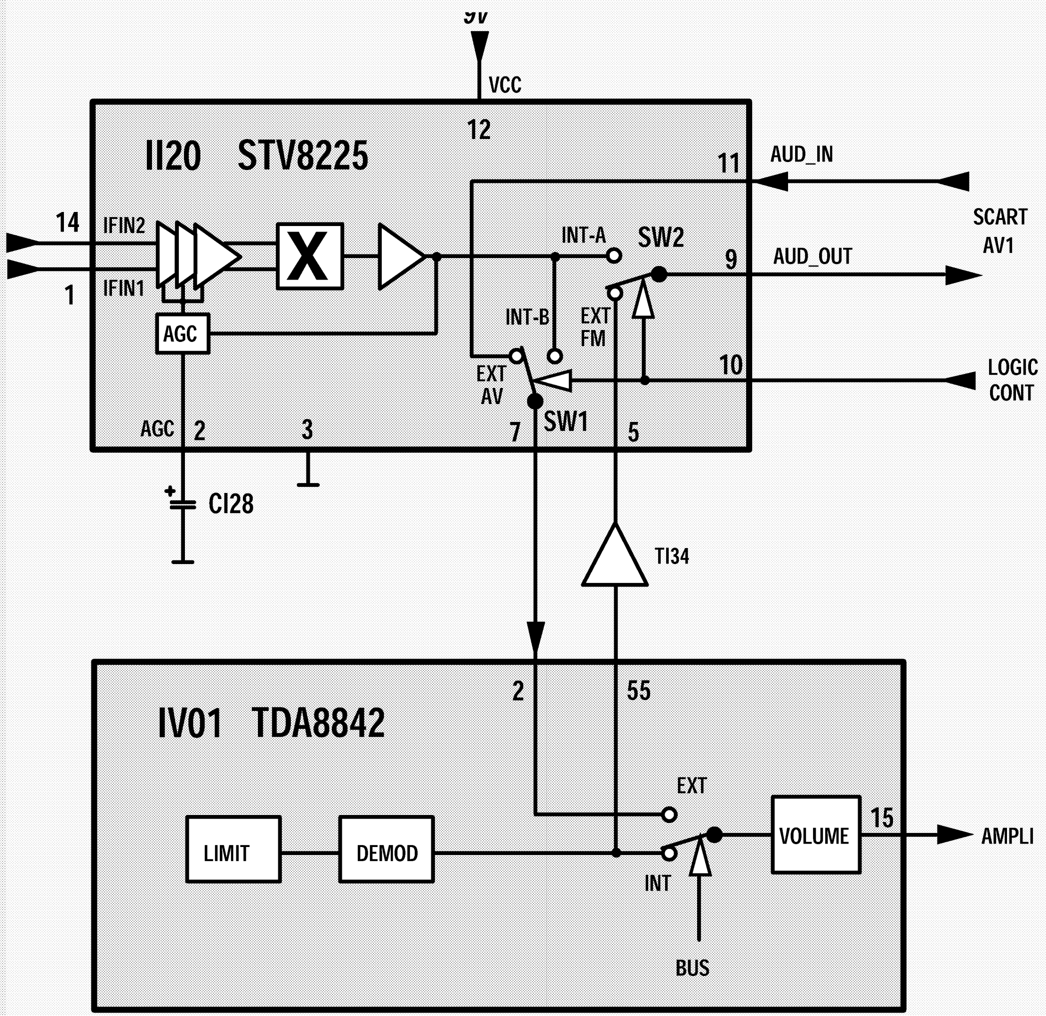

	Logic Control PIN 10 / II20	IV01	II20
BG	0V	INT	SW2 : EXT-FM
LL'	3V	EXT	SW1 : INT- B SW2 : INT- A
LL' AV	5V	EXT	SW1 : EXT-AV SW2 : INT- A
BG AV	7.5V	EXT	SW1 : EXT-AV SW2 : EXT-FM

POWER SUPPLY CHECKS

⚠ Use an isolation transformer when repairing a defective set.

No voltage

+300V voltage absent on CP08. Carry out the following tests :

- Mains supply voltage present ?

If correct:

- Check FP01 and RP01
  - If FP01 is open circuit : check degaussing RP02
  - If FP01 or RP01 are open circuit : check TP20
    - If TP20 is short circuit check : replace TP20, TP22 and TP23

TP20 does not switch

Correct voltage present on CP08 but TP20 is not switching.
Carry out the following tests :

- Voltage the gate of TP20 :

  No voltage or < 2V ?
  - check TP20 and RP20.
    - If TP20 or RP20 is open circuit : replace TP22 and TP23 ,RP20,TP20.

- Check DP27, DP21, TP25, DP25, RP21, RP90

- Check TP22 and TP23.

System UB voltage too low

If the operating conditions described below (+300V/CP08, TP020 switching) are correct:
- Check IP01, IP50 and TP52.

POWER SUPPLY CHECKS, LOW VOLTAGE METHOD

- Carefully discharge capacitor CP08
- Shunt resistors RP05 to RP07 using a 10-K resistor.
- Connect point 9 of LP03 to the junction point of RP05/CP06.
- Earth the base of TP52 (to prevent instability).
- Earth the base of TR08 (JR24) (forcing standby to prevent instability).
- Connect a 12V DC supply to pin 9 of LP03.

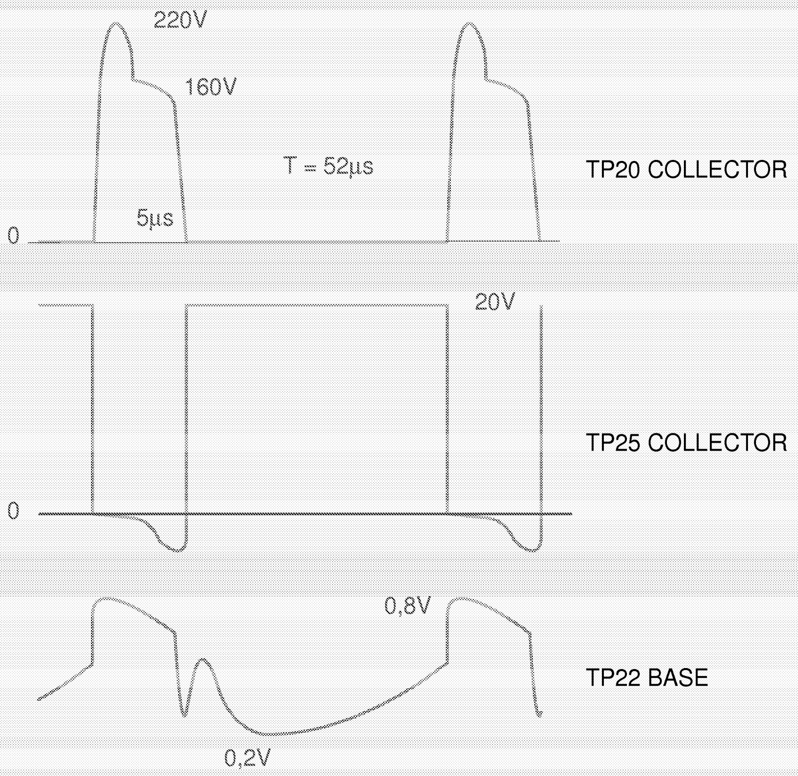

UB = 104V, UA = 12,4V

POWER SUPPLY CHECKS USING A LOAD RESISTOR

- Disconnect pin 1 from LL05.
- Earth the base of TP52 (to prevent instability at switch "ON").
- Connect the mains supply voltage .
  Collector TP20 : 580Vpp, T=20µs.
  UB = 104V

- Load the UB supply rail with 220V / 75W bulb.
  Collector TP20 : 580Vpp, T=10µs.
  UB= 104V.

(A) DIFFERENCES BETWEEN EUROPE AND ASIA

POSITION	EUROPE	ASIA
RI48	220R	180R
RI49	150R	180R
CP08	100uF/400	220uF/450V
CP09	1N5F	2N2
DP01	RS205L-L105	RS255-K105
DP82	DELETE	ADD
JP02	AD	DELETE
LP02	OREGA 12MH	PANASONIC
LP03	OREGA SMT17	FRONTIER SRV-3513
RP01	5R1/5W	2R7
RP01B	DELETE	POS 5R0
RP02	ADD 18R0	DELETE
RP02A	DELETE	ADD 5R0
RP03	DELETE	5R
RP05/06/07	270K/0.25W	120K/0.25W
RP41	22K	18K
TP20	STP3NA80FI	STP5N80FI
ZP01	DELETE	EAZV10D471
DR04	1N4148	DELETE
IR01(TXT)	VT01	VT02
IR01(W/O TXT)	VN01	VN02
LR03	0R	0R
LR04	0R	0R
RR16	220R	3K6
RR17	1K	3K6
RR18	1K	3K6
RR19	1K	3K6
RR20	DELETE	680R0
RR24	ADD	DELETE
RR50	1K	0R
RR80	DELETE	ADD
RR81	ADD	DELETE
CV24	ADD	DELETE
CV25	ADD	DELETE
CV26	ADD	DELETE
CV40	DELETE	ADD
JV58	DELETE	ADD
JV59	DELETE	ADD
JV60	DELETE	ADD
RV16	ADD	DELETE
RV17	ADD	DELETE
RV18	ADD	DELETE
RV19	ADD	DELETE
RV20	ADD	DELETE
RV21	ADD	DELETE
RV22	ADD	DELETE
RV23	ADD	DELETE
RV34	ADD	DELETE
RV35	62R	75R
RV36	ADD	DELETE
RV42	DELETE	ADD
RV44	15R	0R
TV01	ADD	DELETE
TV02	ADD	DELETE
TV03	ADD	DELETE
TV04	ADD	DELETE
TV05	ADD	DELETE
TV06	ADD	DELETE
TV07	ADD	DELETE
TV08	ADD	DELETE
DX04	DELETE	ADD
RX01	390R0	4K7
RX02	390R0	4K7
RX03	390R0	4K7
RX04	220R0	3K3
RX11	6K2	6K2
TX02	ADD	DELETE
BE01	SCART	CINCH

(B) DIFFERENCES BETWEEN 14" AND 20"/21" (CRT BOARDS, POWER)

POSITION	14"	20"/21"
CT51/61/71	820P	270P/330P
CT52/62/72	680P	DELETE
DT51/61/71	JUMPER	1N4148
DT52/62/72	1N4148	DELETE
DT53/63/73	JUMPER	BAT85
RT51/61/71	10K	12K
RT55/65/75	DELETE	1K
RT56/66/76	220R	150R
RT59/69/79	DELETE	47R
TT51/61/71	DELETE	BF422
CP23	1N5/50V	2N2/50V
CP90	1000UF/16V	1000UF/25V
DP27	24V	27V
DP40	24V	27V
DP82	DELETE	BYW76
LP90	JUMPER	DELETE
LP91	DELETE	JUMPER
RP29	15K	22K
RP37	18K	33K
RP53	10K	15K
RP90	0.22/0.25W	0.22/0.35W
SP01	DELETE	DELETE

(C) DIFFERENCES BETWEEN MINI NECK AND NARROW NECK PICTURE

POSITION	MINI	NARROW
JT81	ADD	DELETE
JT82	DELETE	ADD
JT83	DELETE	ADD
JT84	ADD	DELETE

(D) PICTURE TUBE MATCHING

CRT	14" CHUNG HWA	14" POLCOLOR	14" THAI CRT	14" ORION	20" CHUNG HWA	20" VIDEOCOLOR	21" CHUNG HWA	21" VIDEOCOLOR
RF09/K	1.37	1.5	1.5	1.37	1.82	1.58	1.82	1.58
RF17/K	1.37	1.5	1.5	1.37	1.82	1.58	1.82	1.58
CL10/pF	680	560	560	680	820	680	680	680
RL14/R	1.0/1W	0.47/1W	1.0/1W	1.0/1W	0.47/1W	0.47/1W	0.47/1W	0.47/1W
LL05	20820700	20820700	20820700	20820700	20801770	20801770	20801770	20801770
	20840590	20840590	20840590	20840590	20835940	20835940	20835940	20835940
CL04/nF	6.6	6.6	6.6	6.6	8.8	6.6	8.2	6.6
CL05/nF	390	470	470	390	470	390	390	390
CL08/nF	-----	-----	-------	--------	-------	--------	-------	-------
CL33/nF	-----	-----	------	------	1	1	1	1
DL08	-----	-----	------	------	------	------	------	------
FL01	JUMPER	JUMPER	JUMPER	JUMPER	JUMPER	JUMPER	JUMPER	JUMPER
LL03/uH	-----	-----	------	------	58	58	58	58
LL08/uH	JUMPER	JUMPER	JUMPER	JUMPER	JUMPER	JUMPER	JUMPER	JUMPER
RL03/K	-----	-----	------	1k/1W	1k/1W	1k/1W	1k/1W	1k/1W
RL07/R	39/1W	39/1W	39/1W	39/1W	33/1W	33/1W	33/1W	33/1W
TL02	S2000N	S2000N	S2000N	S2000N	S2000N	S2000N	S2000N	S2000N
RL07/R	22/1W	22/1W	22/1W	22/1W	15/1W	15/1W	15/1W	15/1W
TL02	BUH515TH	BUH515TH	BUH515TH	BUH515TH	BUH515TH	BUH515TH	BUH5125TH	BUH515TH
RL08/K	-----	-----	------	------	------	------	------	------
RL09/K	3.9	3.9	3.9	3.9	5.6	5.6	5.6	5.6
RL10/K	15.0	15.0	15.0	15.0	13.0	13.0	13.0	13.0
RL12/R	0.68	0.22	0.68	0.68	0.22	0.22	0.22	0.22
RL20/R	15/.5W	15/.5W	15/.5W	15/.5W	47/.35W	47/.35W	47/.35W	47/.35W
RL41/K	22	22.0	22.0	22.0	18.0	18.0	18.0	18.0
RL62/K	82.5	82.5	82.5	82.5	41.2	41.2	41.2	41.2
RP54/K	2	2.0	2.0	2.0	1.82	1.82	1.82	1.82
UB/V	105.5	105.5	105.5	105.5	115.5	115.5	115.5	115.5
RH07	3K9	3K9	3K9	3K9	4K7	4K7	4K7	4K7
DT52/62/72	RCF1K2	RA2K2	TBC	TBC	1K2	1K2	1K2	1K2
RT57/67/77	1N4148	BAV21	TBC	TBC	-	-	-	-

(E) DIFFERENCES AMONG AUDIO OUTPUT POWER REQUIREMENT

POSITION	1.2W (14"EUROPE)	3W (14" ASIA)	5W (20"/21"ASIA/EU)
CA03	15nF	22nF	22nF
CA04	15nF	10nF	22nF
CA06	DELETE	100nF	100nF
CA09	DELETE	4n7F	4n7F
IA21	DELETE	TDA7253	TDA7253
IA22	TDA7267	DELETE	DELETE
* JA06	DELETE	JUMPER	JUMPER
* JA07	DELETE	JUMPER	JUMPER
* JA08	DELETE	JUMPER	JUMPER
LA01	LP03=Orege SMT use47uH	JUMPER	JUMPER
	LP03=TDK SMT USE 22uH		
RA03	12K	12K	15K
RA04	6K8	33K	5K6
RA05	2K7	180R	2K7
RA06	4K7	DELETE	DELETE
RA13	DELETE	4R7	4R7
RA25	DELETE	1K2	1K2
RA26	DELETE	47R	47R
RA22	3K3	2K4	2K4
RA31	1R5	22R	22R
CA24	DELETE	ADD	ADD

* REFER TO PART LIST

(F) DIFFERENCES FOR 5W ASIA/EUROPE ACOUSTIC REQUIREMENTS

POSITION	EUROPE	ASIA
CA03	22nF	39nF
RA03	15K	7K5
RA04	5k6	7k5
RA05	2K7	JUMPER

(G) DIFFERENCES FOR JA01 OPTIONS

POSITION		
JA01	WITH HEADHONE (BE02), JA01 DELETED.	
	WITHOUT HEADHONE (BE02), JA01 ADDED.	

(H) DIFFERENCES FOR SCART AND CINCH CONNECTORS

POSITION	SCART WITH II20	SCART WITHOUT II20	CINCH WITHOUT II20
RI02	7K5	10K	5K6
RI03	7K5	10K	5K6
RI72	510R	18K	27K
RI73	560R	4K7	2K
CA21	330pF	470pF	470pF
CI01	270pF	270pF	270pF
CI02	270pF	270pF	270pF

(I) FOR MACROVISION

POSITION	OTHERS	LL' SETS	REMARK
CI42	MPC47nF	5mm JUMPER	SOLDERED ON COPPER SIDE
* JV38	10mm JUMPER	CC 47nF	
CI80	DELETE	CC 47nF	
CV31	CC47nF	DELETE	

* REFER TO PART LIST

(J) DIFFERENCES BETWEEN BGHILL' - BGDKK' - BG AND I

POSITION	BGHILL' (VST)	BGDKK	BG	I	BGHILL'(FST)
CI20	1NF	-	-	-	1NF
CI21	10uF	-	-	-	100uF
CI23	22NF	-	-	-	22NF
CI24	22NF	-	-	-	22NF
CI27	22uF	-	-	-	22uF
CI28	10uF	-	-	-	10uF
CI37	22NF	22NF	-	-	22NF
CI38	22NF	22NF	-	-	22NF
CI39	1NF	1NF	-	-	1NF
CI40	-	-	-	-	-
CI50	1P5F	-	-	-	1P5F
CI60	4N7F	4N7F	-	-	4N7F
CI61	2P7F	5P6F	-	-	2P7F
CI62	2P7F	5P6F	-	-	2P7F
CI63	22PF	39PF	-	-	22PF
CI64	47PF	47PF	-	-	47PF
DI20	BA282	-	-	-	BA282
DI21	BA282	-	-	-	BA282
DI31	BA282	BA282	0R	-	BA282
DI32	BA282	BA282	-	0R	BA282
DI33	1N4148	-	-	-	1N4148
DI34	0R	-	-	-	0R
DI60	BA282	BA282	-	-	BA282
II20	STV8225	-	-	-	STV8225
JI06	-	-	-	-	-
JI21	-	0R	0R	0R	-
JI22	-	220R	220R	220R	-
JI23	-	-	-	-	-
JI24	-	0R	0R	0R	0R
JI25	0R	-	-	-	0R
JI26	0R	-	-	-	0R
* JI35	0R	0R	0R	-	0R
* JI36	0R	0R	-	-	0R
* JI37	0R	0R	-	-	0R
JI63	0R	0R	-	-	0R
LI30	LA 7X7 77.8MHz 135NH	LA 7X7 77.8MHz 150NH	LA7X7 77.8MHz 150NH	LA7X7 77.8MHz 150NH	LA7X7 77.8MHz 135NH
LI32	LF 4U7H	LF 3U9H	LF 4U7H	LF 4U7H	LF 3U9H
LI61	LA 7X7 32.4MHz	LA 7X7 29.65MHz	-	-	LA7X7 32.4MHz
QI20	FILSWL9456M	-	-	-	FILSWL9456M
QI30	FILSWG1967M	FILSWK2967M	FILSWG1962M	FILSWJ1952M	FILSWG1967M
QI31	FILC 5M5Hz	FILC 5M5Hz	FILC 5M5Hz	-	FILC 5M5Hz
QI32	FILC 6M0Hz	FILC 6M5Hz	-	FILC 6M0Hz	FILC 6M0Hz
QI33	FILCTRP 5M74Hz	FILCTRP 5M74Hz	FILCTRP 5M74Hz	-	FILCTRP 5M74Hz
QI34	FILCTRP 6M0Hz	FILCTRP 6M5Hz	-	FILCTRP 6M0Hz	FILCTRP 6M0Hz
RI11	180R	68R	68R	68R	180R
RI13	4K7	4K7	8K2	8K2	8K2
RI17	22R	39R	47R	47R	10R
RI20	2K2	-	-	-	2K2
RI21	6K8	-	-	-	6K8
RI22	10K	-	-	-	10K
RI23	10K	-	-	-	10K
RI24	100R	-	-	-	100R
RI38	1K8	1K8	-	-	1K8
RI39	1K8	1K8	-	-	1K8
RI40	-	-	-	-	
RI41	4K7	4K7	-	-	4K7
RI45	120R	100R	120R	120R	100R
RI56	12K	0R	0R	0R	12K
RI57	-	47R	47R	47R	-
RI58	-	1K	1K	1K	-
RI60	3K9	3K9	-	-	3K9
RI61	2K7	2K7	-	-	2K7
RI62	2K7	2K7	-	-	2K7
RI63	2K7	22K	-	-	2K7
RI64	150K	150K	-	-	150K
TI20	DTC144EK	-	-	-	DTC144EK
TI21	DTC144EK	-	-	-	DTC144EK
TI32	DTC144EK	DTC144EK	-	-	DTC144EK
TI35	-	BC548B	BC548B	BC548B	-
TI60	BC848B	BC848B	-	-	BC848B
CR15	10UF	-	-	-	10UF
CR17	100PF	100PF	-	-	100PF
CR27	220PF	-	-	-	220PF
CR38	1NF	-	-	-	1NF
* JR11	0R	-	-	-	0R
* JR13	0R	-	-	-	0R
LR11	0R	0R	-	-	0R
RR28	1K5	-	-	-	1K5
RR29	3K3	-	-	-	3K3
RR44	1K	1K	-	-	1K
RR51	10K	-	-	-	10K
RR66	100R	100R	-	-	100R
TR06	BC848B	-	-	-	BC848B

* REFER TO PART LIST

WARNING :	*Before servicing this chassis read the safety recommendations.*
ATTENTION :	*Avant toute intervention sur ce châssis, lire les recommandations de sécurité.*
ACHTUNG :	*Vor jedem Eingriff auf diesem Chassis, die Sicherheitsvorschriften lesen.*
ATTENZIONE :	*Prima di intervenire sullo chassis, leggere le norme di sicurezza.*
IMPORTANTE :	*Antes de cualquier intervención, leer las recomendaciones de seguridad.*

Do not disconnect modules when they are enregized! Repairs on power supply section are to be carried out only with isolating transformer.

Ne pas retirer les modules lorsqu'ils sont sous tension. N'effectuer les travaux de maintenance sur la partie reliée au secteur (Switch Mode) qu'au travers d'un transformateur d'isolement.

Module nicht bei eingeschaltetem Gerät entfernen ! Servicearbeiten am Netzteil nur unter Verwendung eines Regeltrenntrafos durchführen.

Non scollegare i moduli quando sono alimentati! Intraprendere riparazioni sulla sezione alimentatore solo con trasformatore isolante.

No desconectar los módulos cuando están activados. Las reparaciones en la sección de alimentación de energía deben ser ejecutadas solamente con un transformador de separación.

⚠ Indicates critical safety components, and identical components should be used for replacement. Only then can the operational safety be garanteed.

Le remplacement des éléments de sécurité (repérés avec le symbole ⚠) par des composants non homologués selon la Norme CEI 65 entraine la non-conformité de l'appareil. Dans ce cas, la responsabilité du fabricant n'est plus engagée.

Wenn Sicherheitsteile (mit dem Symbol ⚠ gekennzeichnet) nicht durch Original - Ersatzteile ersetzt werden, erlischt die Haftung des Herstellers.

La sostituzione degli elementi di sicurezza (marcati con il segno ⚠) con componenti non omologati secondo la norma CEI 65 comporta la non conformitá dell'apparecchio. In tal caso è "esclusa la responsabilità " del costruttore.

La sustitución de elementos de seguridad (marcados con el simbolo ⚠) por componentes no homologados segun la norma CEI 65, provoca la no conformidad del aparato. En ese caso, el fabricante cesa de ser responsable.

Note : During measurements in the power supply unit, use the primary power unit ground (Emit. TP060).

Attention : Mesures dans le bloc alimentation. Utiliser la masse du bloc alimentation (Emet. TP060).

Achtung : Bei Messungen im Primärnetzteil. Primärnetzteilmasse verwenden (Emit. TP060).

Attentionze : Misure nell'alimentatore primario. Usare massa alimentazione primario (Emet. TP060).

Cuidado : Medida en el bloque de alimentación. Utilizar la masa del bloque de alimentación (Emet. TP060).

MEASUREMENT CONDITIONS - CONDITIONS DE MESURES - MESSBEDINGUNGEN
CONDIZIONI DI MISURA - CONDICIONES DE MEDIDAS

RECEIVER :
Bar test pattern : PAL, I standard, 100% white.

- On UHF, input level 1 mV
- Via the scart socket, input level 1 Vpp

Colour, contrast and brightness at mid-position, sound at minimum.
Programme selected : PR 01.
DC voltages measured between the point and earth using a digital voltmeter.

RECEPTEUR :
Mire de barres : SECAM, Norm L, Blanc 100%.

- En UHF, niveau d'entrée 1 mV
- Par la prise Péritélévision, niveau d'entrée 1Vcc.

Couleur, contraste, lumière à mi-course, son minimum.
Programme affecté PR 01.
Tensions continues relevées par rapport à la masse avec un voltmètre numérique.

EMPFÄNGER :
Farbbalken : PAL, Norm G, Weiss 100%

- Bei UHF Eingangspegel 1 mV.
- Über die Scartbuchse : Eingangspegel 1 Vss.

Farbe, Kontrast, Helligkeit in der Mitte des Bereichs, Ton auf Minimum.
Zugeordnetes Programm PR 01.
Gleichspannungen mit einem digitalen Voltmeter zur Masse gemessen.

RICEVITORE :
Monoscopio per barre : PAL, norma G. bianco 100%.

- In UHF, livello d'entrata 1 mV,
- Per la presa SCART, livello d'entrata 1 Vcc.

Colore, Contrasto, Luce a metä corsa, Suono minimo.
Programma designato PR 01.
Tensioni continue rilevate rispetto alla massa con un voltametro numerico.

RECEPTOR :
Mira de barras : PAL, norma G, blanco 100%.

- En UHF, nivel de entrada 1 mV,
- Por la toma Peritelevision, nivel de entrada 1 Vpp.

Color, Contraste, luz a mitad de carrera, Sonido minimo.
Programa afectado PR 01.
Tensiones continuas marcadas en relacion a la masa con un voltimetro digital.

THOMSON MULTIMEDIA

TV

Brandt FERGUSON NORDMENDE SABA TELEFUNKEN THOMSON

PARTS LIST
LISTE PIECES DETACHEES
ERSATZTEILLISTE
LISTA PARTI DI RICAMBIO
LISTA DE PIEZAS DE REPUESTO

FERGUSON
M5115UT
Chassis TX807

MODULES

MAIN T807V26C705030

FL01	RXE017	⚠	10529690
IA21	TDA7253		20203120
IF01	TDA9302H		20819860
II01	KIA78L09BP		20835320
IP50	TL431		15069010
IR01	TMP47C1637N TX807-VT11		20925200
IR02	ST24W04		20659470
IV01	TDA8842		20751980
IX01	STV5348D		20765620

IP01	TLP621 GR(D4-LF2 T)	⚠	20827900
TA21,TI35, TR01,TX02	BC548B		16000930
TA22	BC557B		16001060
TA23,TL01	BC337-40		45001466
TH01,TP22,52, TR05,08	BC547B		16000890
TH02,03,04	BC857C SMD		50854389
TI11	MMBTH10L SMD		16006500
TI31,33,34, TR04,09,TV01, 02,04,06	BC847B SMD		11070770
TL02	S2000N/BU508A		20578720
TL03,TT81	BC327-40		16000450
TL50	2SC2236Y		16000220
TP20	STP3NA80FI	⚠	20818740
TP23	BC327-25		16000440
TP25,TX01,03	BC558B		16001110
TR02	BCR185 SMD		16006900
TR03	BC848C SMD		20438166
TR07	2SA1020Y		16003740
TR10	BC547C		16000900
TT51,61,71	BF422		16003090
TT52,62,72	2SC2482N		16003760
TT53,63,73	BF423		16003110
TV03,05,07	RN2410		20824180
TV08	RN1409 SMD		20688820

DA01,DK05, DL60,63,DP37, 38,DR03,04, DT51,61,71, DV01,04,05,06, 09,10,11,DX01, 02,03	1N4148	44009209
DA02,DT82	BZX55B9V1	70438220
DF01,DL05,06, 15,20,45,47, 50,DP25,90	RGP10G	10459090
DH01	ZTK33A	20494820
DK01	MV5491A LED	10036730
DK04	BZX55C5V6/ZPD5V6	44025401
DL01	1N4001	16008160
DL04	BY228	10406470
DL21,DP26	BAV21	44044407
DL25,DP27,40	BZX55C27	60447870
DL51	1N5233B	20264850
DL62	ZPD4,7/BZX55C4V7	20475400
DP01	RS205L-K105	20807220
DP21	BZX55B15/ZPD15 2%	80444020
DP23,30	ZPD8,2	44021504
DP57	BZX55C6V8	50890650
DP80	BYW76	16009120
DR02	BZX55B5V1/ZPD5V1 2%	44035702
DV03	MUR115/BYW100-150	44073604
DX05	BZX55C3V3	30948790

QC01	4M433619HZ	10087710
QC02	3M579545HZ	10087720
QI30	OFWJ1952M FOS	20232080
QI32	6M0HZ	48039700
QI34	6M0HZ	48042300
QR01	6M0HZ	20767900
QX01	13M875HZ	10253990

LI30	77M8HZ	20862330

RA13	4R7 OHM 5% 0,25W	⚠	35032200
RL12,16,RP90	0R22 OHM 5% 0,50W	⚠	10305450
RL14	0R47 OHM 5% 1W	⚠	15042720
RL20	47R0 OHM 5% 0,30W	⚠	13000690
RL45	0R1 OHM 10% 0,40W	⚠	15022510
RL51	1R8 OHM 5% 0,30W	⚠	15009780
RP01	5R1 OHM 10% 2,5W		10547070
RP02	18R0 OHM 230V PTC	⚠	10509980
RP15	10M0 OHM 5% 0,70W	⚠	10074320
RP20	1R0 OHM 5% 2,50W		10383240
RP56,58	41K2 OHM 1% 0,25W		50883790
RR04	8R2 OHM 5% 0,25W	⚠	15010150
RR72	200R0 OHM 1% 0,25W		80437540
RT55,58,65,68, 75,78	1K0 OHM 5% 0,30W	⚠	15009700
RT92	1K5 OHM 5% 0,50W		10121880

CL04	6N6F 1K6V		80304700
CL05	390N0F 10% 250V		43171400
CL10	680P0F 10% 3K0V		20248410
CL16,40,50	330P0F 10% 1K0V		14030320
CL20	22U0F 20% 250V	⚠	13071070
CL33	1N0F 20% 1K0V		20388780
CP01,02	100N0F 20% 275V	⚠	10331520
CP04	10N0F 20% 400V		14033040
CP05,06	4N7F 1K0V		10058740
CP08	100U0F 385V		30662900
CP09	1N5F 10% 1K0V		20338740
CP15	1N0F 20% 400V	⚠	20822690
CP82	680P0F 10% 1K0V		20505600
CP91	2N2F 10% 250V	⚠	20833060
CT90	2N2F 2K0V		14036020

LL01	DRIVER		20814520
LL03		⚠	80367500
LL05	DSTLH27	⚠	20835940
LP02		⚠	10395160
LP03	SMT17	⚠	10528770

R : RECYCLED PART
: PIECE RECYCLEE
: AUSTAUSCHTEILE
: RICAMBIO RICICLATO
: MODULO REPROCESADO

For any requests, please contact THOMSON multimedia after sales service area
Pour toutes précisions, contactez votre service apres vente local THOMSON multimedia
Für weitere Auskünfte, wenden Sie sich bitte an die THOMSON multimedia Kundendienste
Per precisazioni, contattare l'assistenza tecnica THOMSON multimedia
Para cualquier pregunta, por favor contactar con el responsable de zona del servicio postventa de THOMSON multimedia

06 / 98 35066010
REV. N° 0 00 / 00 00000000

No copying, translation, modification on other use authorized. All rights reserved worldwide. • Tous droits de reproduction, de traduction, d'adaptation et d'exécution réservés pour tous les pays. • Sämtliche Urheberrechte an diesen Texten und Zeichnungen stehen uns zu. Nachdrucke, Vervielfältigungen - auch auszugsweise - nur mit unserer vorherigen Zustimmung zulässig. Alle Rechte vorbehalten. • I diritti di riproduzione, di traduzione, e esecuzione sono riservati per tutti i paesi. • Derechos de reproduccion, de traduccion, de adapacion y de ejecucion reservados para todos los paises.

OTHER PARTS
AUTRES PIECES
SONSTIGE TEILE
ALTRE PARTI
OTRAS PIEZAS

BE01	SCART SOCKET PRISE PERITEL EURO-AV-BUCHSE EUROPRESA NORMALIZZATA EUROCONECTOR	10362830
BE02	HEADPHONE SOCKET PRISE CASQUE KOPFHOERERBUCHSE PRESA JACK TOMA JACK	20345310
BE03	CINCH SOCKET PRISE CINCH CINCH-BUCHSE PRESA CINCH TOMA CINCH	11007219
BE04	HEADPHONE SOCKET PRISE CASQUE KOPFHOERERBUCHSE PRESA JACK TOMA JACK	30909940
BT02	CATHODE RAY TUBE SOCKET ⚠ SUPPORT TUBE CATHODIQUE BILDROEHRENFASSUNG SUPPORTO TUBO CATODICO SOPORTE T.R.C	20631370
FP01	1A6T TIME-LAG FUSE ⚠ 1A6T FUSIBLE TEMPORISE 1A6T SICHERUNG 1A6T FUSIBILE TEMPORIZZATO 1A6T FUSIBLE TEMPORIZADO	48064700
NH01	CTT5045 UHF/VHF TUNER R CTT5045 TETE UHF/VHF CTT5045 UHF/VHF TUNER CTT5045 TUNER UHF/VHF CTT5045 SINTONIZADOR UHF/VHF	20765490
SK01,02,03,04	MICROSWITCH MICRO CONTACTEUR MIKROSCHALTER MICROINTERRUTTORE MICROCONTACTOR	30011100
SP05	ON/OFF SWITCH ⚠ CONTACTEUR MARCHE/ARRET EIN-AUS SCHALTER CONTATTORE ACCESO/SPENTO CONTACTOR MARCHA/PARADA	20612390

EQUIPMENT/PRESENTATION
EQUIPEMENT/PRESENTATION
AUSSTATTUNG/GEHAEUSE
PARTI VARIE
EQUIPO/PRESENTACION

FRONT PANEL FACADE FRONTPLATTE PANNELLO FRONTALE PANEL FRONTAL	25314870
LOGO FERGUSON LOGO FERGUSON SCHRIFTZUG FERGUSON MARCHIO FERGUSON LOGOTIPO FERGUSON	25295050
8R OHM 8W LOUDSPEAKER 50X90 8R OHM 8W HAUT PARLEUR 50X90 8R OHM 8W LAUTSPRECHER 50X90 8R OHM 8W ALTOPARLANTE 50X90 8R OHM 8W ALTAVOZ 50X90	10377680
REAR PANEL ⚠ DOS RUECKWAND PANNELLO POSTERIORE TAPA POSTERIOR	25310900
POWER SUPPLY LEAD (UK) ⚠ CORDON D'ALIMENTATION (UK) NETZKABEL (UK) CAVO DI ALIMENTAZIONE (UK) CABLE DE ALIMENTACION (UK)	20492600
ON/OFF BUTTON TOUCHE MARCHE/ARRET EIN-AUS TASTE TASTO ACCESSO/SPENTO TECLA MARCHA/PARADA	25314630
BUTTON STRIP BARRETTE DE TOUCHES TASTENLEISTE PIATTINA TASTI PLACA DE TECLAS	25317290
A48EAX13X01 CATHODE RAY ⚠ A48EAX13X01 TUBE CATHODIQUE A48EAX13X01 FARBBILDROEHRE A48EAX13X01 TUBO CATODICO A48EAX13X01 T.R.C	10543360
DEGAUSSING COIL ⚠ BOBINE DE DEMAGNETISATION ENTMAGNETISIERUNGSSPULE BOBINA DI SMAGNETIZZAZIONE BOBINA DE DESIMANTACION	47320196
F3092 REMOTE CONTROL F3092 TELECOMMANDE F3092 FERNBEDIENUNG F3092 TELECOMANDO F3092 TELEMANDO	20647490
FOLDING BOX EMBALLAGE CARTON KARTON IMBALLAGGIO CARTONE EMBALAJE CARTON	25329710
FITTING UPPER CALE SUPERIEURE POLSTER OBEN DISTANZIATORE SUPERIORE CALZO SUPERIOR	25312360
FITTING DOWNER CALE INFERIEURE POLSTER UNTEN DISTANZIATORE INFERIORE CALZO INFERIOR	25312390

INSTRUCTIONS
NOTICES
ANLEITUNGEN
ISTRUZIONI
MANUALE

M5115UT PARTS LIST M5115UT LISTE DE PIECES DETACHEES M5115UT ERSATZTEILLISTE M5115UT LISTA PARTI DI RICAMBIO M5115UT LISTA DE PIEZAS DE REPUESTO	35066010
TX807 SERVICE MANUEL EUROPE TX807 DOC TECHNIQUE EUROPE TX807 TECHNISCHE DOKUMENTATION EUROPE TX807 DOCUMENTAZIONE TECNICA EUROPE TX807 DOCUMENTACION TECNICA EUROPE	35058840
M5115UT UM FERGUSON GB M5115UT NU FERGUSON GB M5115UT BA FERGUSON GB M5115UT IU FERGUSON GB M5115UT IU FERGUSON GB	25335610

The description and characteristics given here are of informative significance only, and non committal. To keep up the high quality of our products, we reserve the right to make any changes or improvement without previous notice. • Les descriptions et caractéristiques figurant sur ce document sont données à titre d'information et non d'engagement. En effet, soucieux de la qualité de nos produits, nous nous réservons le droit d'effectuer, sans préavis, toute modification ou amélioration. • Die Beschreibungen und Daten in dieser Anleitung dienen nur zur Information und sind nicht bindend. Um die Qualität unserer Produkte ständig zu verbessern, behalten wir uns das Recht auf Änderungen vor. • Le descrizioni e le caratteristiche date su questo documento sono fornite a semplice titolo informativo e senza impegno. Ci riserviamo il diritto di eseguire, senza preavviso, qualsiasi modifica o miglioramento. • Las descripciones y características que figuran en este documento se dan a título de información y no de compromiso. En efecto, en bien de la calidad de nuestros productos, nos reservamos el derecho de efectuar, sin previo aviso, cualquier modificación o mejora.

THOMSON multimedia S.A au capital de 12375616000 FF - 46, Quai Alphonse Le Gallo 92648 Boulogne Cedex FRANCE - RCS NANTERRE B 333 773 174

THOMSON MULTIMEDIA

TV

Brandt FERGUSON SABA TELEFUNKEN THOMSON

PARTS LIST
LISTE PIECES DETACHEES
ERSATZTEILLISTE
LISTA PARTI DI RICAMBIO
LISTA DE PIEZAS DE REPUESTO

THOMSON
20DG15ES
Chassis TX807C

MODULES

MAIN	**T807CF96C002011**	**10674920**

GK001	TSOP1333		25358570
IB001	TDA6107Q/N2		10659660
IF001	TDA9302H		20819860
IP050	TLP621 GR(D4-LF2 T)	⚠	20827900
IP090	STV8130		10658850
IP095	MC7805/ACT		46007400
IR001	M22W04		10456150
IS001	TDA7253		20203120
IV001	TDA9351N1		10649480
TL035	S2055N		20578760
ZP092	MP315	⚠	10575090
ZP094	MP32	⚠	25405650
TI030	DTC144EK SMD		16007030
TL031,**TP**032, 053,054,061, 070,**TS**002,004, 050,051,**TV**020, 022	BC846B SMD		16006260
TL032,**TP**022	BC337-40		45001466
TL050,**TP**025, 026,031,060, 080,**TV**021	BC856B SMD		16006310
TL060	RN2417 SMD		25423180
TL061,062	RN1409 SMD		20688820
TP020	STP3NB90FP		25411640
TP058,072,081, **TR**002	BCR141 SMD		16006890
TP071,**TR**001	BCR185 SMD		16006900

DB030,031,050, 051,070,071, **DJ**020,**DP**031, 032	BAV21	44044407
DF002,**DL**004, 005,015,030, 060,**DP**022,033, 034,035,037, 040,057,058, 070,081,**DV**070, 071	1N4148	44009209
DF010,**DL**011, 013,035,**DP**095	1N4001	16008160
DH001	BZX55C30	80444170
DI030	BA782S	20542050
DL010,012,025, 040,**DP**026	RGP10G	10459090
DL014	BZX55B9V1	70438220
DP001,002,003, 004	BYW27-1000	10455390
DP021,043	BZX55B16	11073430
DP023	BZX55C7V5	80444150
DP027	BZX55C27	60447870
DP030	BZX55C11	11073670
DP080	FUF4005/MUR160	16009580
DP090,092	MUR120	10564670
DR001	BZX55B5V1/ZPD5V1 2%	44035702
GE001	LTL307/EE LED	16010330
FI010	OFWK6270K FOS	10503340
FI030	40M4HZ	10664720
FI050	5M5HZ	10658370
QV001	12M0HZ	25418130
PP051	470R0 OHM	10260350

RB001	1K5 OHM 5% 0,50W		10121880
RB013	10R0 OHM 10% 0,50W		15000160
RB031,051,071	560R0 OHM 10% 0,50W		10257590
RF004,006	1K5 OHM 1% 0,25W		80437630
RF007	1R5 OHM 1% 0,70W		10451140
RF008	2R2 OHM 5% 0,25W	⚠	15009870
RF010	1R5 OHM 5% 0,25W	⚠	13063950
RL010	0R1 OHM 10% 0,40W	⚠	15022510
RL012	0R22 OHM 5% 0,50W	⚠	10305450
RL040	47R0 OHM 5% 0,35W	⚠	20923340
RL090	86K6 OHM 1% 0,25W		15021680
RP002	18R0 OHM 230V PTC	⚠	10509980
RP008	5R1 OHM 10% 2,50W		10472390
RP020	1R0 OHM 5% 2,50W		10383240
RP050	10M0 OHM 5% 0,70W	⚠	10074320
RP054	68K1 OHM 1% 0,70W		10147740
RS028	18R0 OHM 5% 0,30W	⚠	15009660
RS040	4R7 OHM 5% 0,35W	⚠	10226310
RS056	0R47 OHM 10% 0,40W	⚠	15022650
CB001	10N0F 3K0V		14036450
CB004	47N0F 5% 250V		40433080
CL003	10N0F 5% 400V		10588870
CL010,012,040, **CP**089,093	330P0F 20% 1K0V		14035270
CL024	440N0F 5% 250V		43352100
CP001	100N0F 20% 275V	⚠	10331520
CP003	68N0F 20% 250V		10256210
CP004	1N5F 10% 1K0V		20338740
CP005,006	4N7F 1K0V		10058740
CP009	3N3F 20% 1K6V		10607950
CP050	2N2F 20% 400V	⚠	10344870
CP082	1N0F 10% 500V		10546570
LL005	DSTLH27F	⚠	10658470
LL032	DRIVER		20936440
LP002		⚠	10654720
LP003	SMT17	⚠	10674880

R : RECYCLED PART
: PIECE RECYCLEE
: AUSTAUSCHTEILE
: RICAMBIO RICICLATO
: MODULO REPROCESADO

For any requests, please contact THOMSON multimedia after sales service area
Pour toutes précisions, contactez votre service apres vente local THOMSON multimedia
Für weitere Auskünfte, wenden Sie sich bitte an die THOMSON multimedia Kundendienste
Per precisazioni, contattare l'assistenza tecnica THOMSON multimedia
Para cualquier pregunta, por favor contactar con el responsable de zona del servicio postventa de THOMSON multimedia

07 / 2000 35125520
REV. N° 0 00 / 00 00000000

No copying, translation, modification on other use authorized. All rights reserved worldwide. • Tous droits de reproduction, de traduction, d'adaptation et d'exécution réservés pour tous les pays. • Sämtliche Urheberrechte an diesen Texten und Zeichnungen stehen uns zu. Nachdrucke, Vervielfältigungen - auch auszugsweise - nur mit unserer vorherigen Zustimmung zulässig. Alle Rechte vorbehalten. • I diritti di riproduzione, di traduzione, e esecuzione sono riservati per tutti i paesi. • Derechos de reproduccion, de traduccion, de adaptacion y de ejecucion reservados para todos los paises.

OTHER PARTS
AUTRES PIECES
SONSTIGE TEILE
ALTRE PARTI
OTRAS PIEZAS

BB005	CATHODE RAY TUBE SOCKET SUPPORT TUBE CATHODIQUE BILDROEHRENFASSUNG SUPPORTO TUBO CATODICO SOPORTE T.R.C	⚠	80298800
BJ005	CINCH SOCKET PRISE CINCH CINCH-BUCHSE PRESA CINCH TOMA CINCH		11007219
BJ006	CINCH SOCKET PRISE CINCH CINCH-BUCHSE PRESA CINCH TOMA CINCH		30909940
BQ012	HEADPHONE SOCKET PRISE CASQUE KOPFHOERERBUCHSE PRESA JACK TOMA JACK		20345310
BV001	SCART SOCKET PRISE PERITEL EURO-AV-BUCHSE EUROPRESA NORMALIZZATA EUROCONECTOR		10362830
FP001	1A6T TIME-LAG FUSE 1A6T FUSIBLE TEMPORISE 1A6T SICHERUNG 1A6T FUSIBILE TEMPORIZZATO 1A6T FUSIBLE TEMPORIZADO	⚠	48064700
NH001	CTT5010 UHF/VHF TUNER CTT5010 TETE UHF/VHF CTT5010 UHF/VHF TUNER CTT5010 TUNER UHF/VHF CTT5010 SINTONIZADOR UHF/VHF		20812280
SK001,002,003, 004	MICROSWITCH MICRO CONTACTEUR MIKROSCHALTER MICROINTERRUTTORE MICROCONTACTOR		30011100
SP005	ON/OFF SWITCH CONTACTEUR MARCHE/ARRET EIN-AUS SCHALTER CONTATTORE ACCESO/SPENTO CONTACTOR MAECHA/PARADA	⚠	25442860

EQUIPMENT/PRESENTATION
EQUIPEMENT/PRESENTATION
AUSSTATTUNG/GEHAEUSE
PARTI VARIE
EQUIPO/PRESENTACION

FRONT PANEL AND BUTTON GY25TH FACADE ET TOUCHES GY25TH FRONTPLATTE UND TASTE GY25TH PANNELLO FRONTALE E TASTO GY25TH PANEL FRONTAL Y TECLA GY25TH		25459230
REAR PANEL GY26TH DOS GY26TH RUECKWAND GY26TH PANNELLO POSTERIORE GY26TH TAPA POSTERIOR GY26TH	⚠	25459240
INFRARED WINDOW GLACE INFRAROUGE INFRAROTOT FENSTER VETRO INFRAROSSO CRISTAL INFRARROJO		25403400
LOGO THOMSON LOGO THOMSON SCHRIFZUG THOMSON MARCHIO THOMSON LOGOTIPO THOMSON		25381430
16R OHM 10W LOUDSPEAKER 50X90 16R OHM 10W HAUT PARLEUR 50X90 16R OHM 10W LAUSPRECHER 50X90 16R OHM 10W ALTOPARLANTE 50X90 16R OHM 10W ALTAVOZ 50X90		10316960
ON/OFF BUTTON GY25TH TOUCHE MARCHE/ARRET GY25TH EIN-AUS TASTE GY25TH TASTO ACCESO/SPENTO GY25TH TECLA MARCHA/PARADA GY25TH		25459250
POWER SUPPLY LEAD CORDON D'ALIMENTATION NETZKABEL CAVO DI ALIMENTAZIONE CABLE DE ALIMENTACION	⚠	10260830
A48EAX13X01 CATHODE RAY TUBE A48EAX13X01 TUBE CATHODIQUE A48EAX13X01 FARBBILDROEHRE A48EAX13X01 TUBO CATODICO A48EAX13X01 T.R.C	⚠	10543360
DEGAUSSING COIL BOBINE DE DEMAGNETISATION ENTMAGNETISIERUNGSSPULE BOBINA DI SMAGNETIZZAZIONE BOBINA DE DESIMANTACION	⚠	47320196
RCT100 REMOTE CONTROL RCT100 TELECOMMANDE RCT100 FERNBEDIENUNG RCT100 TELECOMANDO RCT100 TELEMANDO		10546340
FOLDING BOX EMBALLAGE CARTON KARTON IMBALLAGGIO CARTONE EMBALAJE CARTON		25380830
FITTING UPPER CALE SUPERIEURE POLSTER OBEN DISTANZIATORE SUPERIORE CALZO SUPERIOR		25403380
FITTING DOWNER CALE INFERIORE POLSTER UNTEN DISTANZIATORE INFERIORE CAZO INFERIOR		25403370

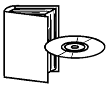

20DG15ES PARTS LIST 20DG15ES LISTE DE PIECES DETACHEES 20DG15ES ERSATZTEILLISTE 20DG15ES LISTA PARTI DI RICAMBIO 20DG15ES LISTA DE PIEZAS DE REPUESTO	35125520
TX807C/CS SERVICE MANUAL TX807C/CS DOC TECHNIQUE TX807C/CS TECHNISCHE DOKUMENTATION TX807C/CS DOCUMENTAZIONE TECNICA TX807C/CS DOCUMENTACION TECNICA	35110300
CDROM TX807 VERSION 2 CDROM TX807 VERSION 2 CDROM TX807 VERSION 2 CDROM TX807 VERSION 2 CDROM TX807 VERSION 2	35110290
TX807C/CS UM D/F/I/GB/GR/DK/NL/S/E/P TX807C/CS NU D/F/I/GB/GR/DK/NL/S/E/P TX807C/CS BA D/F/I/GB/GR/DK/NL/S/E/P TX807C/CS IU D/F/I/GB/GR/DK/NL/S/E/P TX807C/CS IU D/F/I/GB/GR/DK/NL/S/E/P	50011430

The description and characteristics given here are of informative significance only, and non committal. To keep up the high quality of our products, we reserve the right to make any changes or improvement without previous notice. • Les descriptions et caractéristiques figurant sur ce document sont données à titre d'information et non d'engagement. En effet, soucieux de la qualité de nos produits, nous nous réservons le droit d'effectuer, sans préavis, toute modification ou amélioration. • Die Beschreibungen und Daten in dieser Anleitung dienen nur zur Information und sind nicht bindend. Um die Qualität unserer Produkte ständig zu verbessern, behalten wir uns das Recht auf Änderungen vor. • Le descrizioni e le caratteristiche date su questo documento sono fornite a semplice titolo informativo e senza impegno. Ci riserviamo il diritto di eseguire, senza preavviso, qualsiasi modifica o miglioramento. • Las descripciones y características que figuran en este documento se dan a título de información y no de compromiso. En efecto, en bien de la calidad de nuestros productos, nos reservamos el derecho de efectuar, sin previo aviso, cualquier modificación o mejora.

THOMSON multimedia S.A au capital de 932 655 840 € - 46, Quai Alphonse Le Gallo 92648 Boulogne Cedex FRANCE - RCS NANTERRE B 333 773 174

THOMSON MULTIMEDIA

TV

Brandt FERGUSON SABA TELEFUNKEN THOMSON

PARTS LIST
LISTE PIECES DETACHEES
ERSATZTEILLISTE
LISTA PARTI DI RICAMBIO
LISTA DE PIEZAS DE REPUESTO

THOMSON
14MG15ET
Chassis TX807C

MODULES

MAIN	**T807CF911002010**	**10675370**

GK001	TSOP1333	25358570
IB001	TDA6107Q/N2	10659660
IF001	TDA9302H	20819860
IP050	TLP621 GR(D4-LF2 T)	⚠ 20827900
IP090	STV8130	10658850
IP095	MC7805/ACT	46007400
IR001	M22W04	10456150
IS001	TDA7253	20203120
IV001	TDA9351N1	10649480
TL035	S2055N	20578760
ZP094	MP32	⚠ 25405650

TI030	DTC144EK SMD	16007030
TL031,**TP**032, 053,054,061, 070,**TS**002,004, 050,051,**TV**020, 022	BC846B SMD	16006260
TL032,**TP**022	BC337-40	45001466
TL050,**TP**025, 026,031,060, 080,**TV**021	BC856B SMD	16006310
TL060	RN2417 SMD	25423180
TL061,062	RN1409 SMD	20688820
TP020	STP3NB90FP	25411640
TP058,072,081, **TR**002	BCR141 SMD	16006890
TP071,**TR**001	BCR185 SMD	16006900

DB004	1N4004	44009009
DB030,031,050, 051,070,071, **DJ**020,**DP**031, 032	BAV21	44044407
DF002,**DL**004, 005,015,030, 060,**DP**022,033, 034,035,037, 040,057,058, 070,081,**DV**070, 071	1N4148	44009209
DF010,**DL**011, 013,035,**DP**095	1N4001	16008160
DH001	BZX55C30	80444170
DI030	BA782S	20542050
DL010,012,025, 040,**DP**026,090	RGP10G	10459090
DL014	BZX55B9V1	70438220
DP001,002,003, 004	BYW27-1000	10455390
DP021,043	BZX55B16	11073430
DP023	BZX55C7V5	80444150
DP027	BZX55C27	60447870
DP030	BZX55C11	11073670
DP080	FUF4005/MUR160	16009580
DP092	MUR120	10564670
DR001	BZX55B5V1/ZPD5V1 2%	44035702
GE001	LTL307/EE LED	16010330

FI010	OFWK6270K FOS	10503340
FI030	40M4HZ	10664720
FI050	5M5HZ	10658370
QV001	12M0HZ	25418130

PP051	470R0 OHM	10260350

RB001,004	1K5 OHM 5% 0,50W	10121880
RB013	10R0 OHM 10% 0,50W	15000160
RB031,051,071	560R0 OHM 10% 0,50W	10257590
RB033,052,073, **RL**033,**RV**005, 006,010,011, 012,014,019	100R0 OHM 5% 0,25W	30943330
RF004,006	1K5 OHM 1% 0,25W	80437630
RF007	1R82 OHM 1% 0,70W	10451420
RF008	2R2 OHM 5% 0,25W	⚠ 15009870
RF010	1R5 OHM 5% 0,25W	⚠ 13063950
RL010	0R1 OHM 10% 0,40W	⚠ 15022510
RL012	0R22 OHM 5% 0,50W	⚠ 10305450
RL040	47R0 OHM 5% 0,35W	⚠ 20923340
RP002	18R0 OHM 220V PTC	⚠ 41398800
RP008	5R1 OHM 10% 2,50W	10472390
RP020	1R0 OHM 5% 2,50W	10383240
RP050	10M0 OHM 5% 0,70W	⚠ 10074320
RP054	68K1 OHM 1% 0,70W	10147740
RS028	18R0 OHM 5% 0,30W	⚠ 15009660
RS040	4R7 OHM 5% 0,35W	⚠ 10226310
RS056	0R47 OHM 10% 0,40W	⚠ 15022650

CB001	10N0F 3K0V	14036450
CL003	10N0F 5% 400V	10588870
CL010,012,040, **CP**089,093	330P0F 20% 1K0V	14035270
CL021	6N6F 1K6V	80304700
CL022	470P0F 10% 2K0V	25392030
CL024	440N0F 5% 250V	43352100
CP001	100N0F 20% 275V	⚠ 40404090
CP003	68N0F 20% 250V	10256210
CP004	1N5F 10% 1K0V	20338740
CP005,006	4N7F 1K0V	10058740
CP008	68U0F 20% 400V	25414980
CP009	3N3F 20% 1K6V	10607950
CP050	2N2F 20% 400V	⚠ 10344870
CP082	1N0F 10% 500V	10546570

R : RECYCLED PART
: PIECE RECYCLEE
: AUSTAUSCHTEILE
: RICAMBIO RICICLATO
: MODULO REPROCESADO

For any requests, please contact THOMSON multimedia after sales service area
Pour toutes précisions, contactez votre service apres vente local THOMSON multimedia
Für weitere Auskünfte, wenden Sie sich bitte an die THOMSON multimedia Kundendienste
Per precisazioni, contattare l'assistenza tecnica THOMSON multimedia
Para cualquier pregunta, por favor contactar con el responsable de zona del servicio postventa de THOMSON multimedia

07 / 2000 35125300
REV. N° 0 00 / 00 00000000

No copying, translation, modification on other use authorized. All rights reserved worldwide. • Tous droits de reproduction, de traduction, d'adaptation et d'exécution réservés pour tous les pays. • Sämtliche Urheberrechte an diesen Texten und Zeichnungen stehen uns zu. Nachdrucke, Vervielfältigungen - auch auszugsweise - nur mit unserer vorherigen Zustimmung zulässig. Alle Rechte vorbehalten. • I diritti di riproduzione, di traduzione, e esecuzione sono riservati per tutti i paesi. • Derechos de reproduccion, de traduccion, de adaptacion y de ejecucion reservados para todos los paises.

LL005	DSTLH27F	⚠ 10658340
LL032	DRIVER	20936440
LP002		⚠ 10654720
LP003	SMT17	⚠ 10674870

OTHER PARTS
AUTRES PIECES
SONSTIGE TEILE
ALTRE PARTI
OTRAS PIEZAS

BB006	CATHODE RAY TUBE SOCKET SUPPORT TUBE CATHODIQUE BILDROEHRENFASSUNG SUPPORTO CATODICO SOPORTE T.R.C	⚠ 10653850
BQ012	HEADPHONE SOCKET PRISE CASQUE KOPFHOERERBUCHSE PRESA JACK TOMA JACK	20345310
BV001	SCART SOCKET PRISE PERITEL EURO-AV-BUCHSE EUROPRESA NORMALIZZATA EUROCONECTOR	10362830
FP001	1A6T TIME-LAG FUSE 1A6T FUSIBLE TEMPORISE 1A6T SICHERUNG 1A6T FUSIBILE TEMPORIZZATO 1A6T FUSIBLE TEMPORIZADO	⚠ 48064700
IR001	IC SUPPORT 2X4 SUPPORT CI 2X4 IC-FASSUNG 2X4 SUPPORTO CI 2X4 SOPORTE CI 2X4	67449100
NH001	CTT5010 UHF/VHF TUNER CTT5010 TETE UHF/VHF CTT5010 UHF/VHF TUNER CTT5010 TUNER UHF/VHF CTT5010 SINTONIZADOR UHF/VHF	20812280
SK001,002,003, 004	MICROSWITCH MICRO CONTACTEUR MIKROSCHALTER MICROINTERRUTTORE MICROCONTACTOR	30011100
SP005	ON/OFF SWITCH CONTACTEUR MARCHE/ARRET EIN-AUS SCHALTER CONTATTORE ACCESO/SPENTO CONTACTOR MAECHA/PARADA	⚠ 25442860

EQUIPMENT/PRESENTATION
EQUIPEMENT/PRESENTATION
AUSSTATTUNG/GEHAEUSE
PARTI VARIE
EQUIPO/PRESENTACION

A34AGT13X38 CATHODE RAY TUBE A34AGT13X38 TUBE CATHODIQUE A34AGT13X38 FARBBILDROEHRE A34AGT13X38 TUBO CATODICO A34AGT13X38 T.R.C	⚠ 20786290
DEGAUSSSING COIL BOBINE DE DEMAGNETISATION ENTMAGNETISIERUNGSSPULE BOBINA DI SMAGNETIZZAZIONE BOBINA DE DESIMANTACION	⚠ 20613360
POWER SUPPLY LEAD CORDON D'ALIMENTATION NETZKABEL CAVO DI ALIMENTAZIONE CABLE DE ALIMENTACION	⚠ 10260830
8R OHM 3W LOUDSPEAKER 40X70 8R OHM 3W HAUT PARLEUR 40X70 8R OHM 3W LAUTSPRECHER 40X70 8R OHM 3W ALTOPARLANTE 40X70 8R OHM OHM 3W ALTAVOZ 40X70	20901550
RCT100 REMOTE CONTROL RCT100 TELECOMMANDE RCT100 FERNBEDIENUNG RCT100 TELECOMANDO RCT100 TELEMANDO	10546340
TELESCOPIC ANTENNA ANTENNE TELESCOPIQUE TELESKOPANTENNE ANTENNA TELESCOPICA ANTENA TELESCOPICA	5087882A
FRONT PANEL GY20TH FACADE GY20TH FRONTPLATTE GY20TH PANNELLO FRONTALE GY20TH PANEL FRONTAL GY20TH	25412830
REAR PANEL GY20TH DOS GY20TH RUECKWAND GY20TH PANNELLO POSTERIORE GY20TH TAPA POSTERIOR GY20TH	⚠ 25416570
LED WINDOW GLACE LED LED FENSTER VETRO LED CRISTAL LED	25316500
INFRARED WINDOW GLACE INFRAROUGE INFRAROT FENSTER VETRO INFRAROSSO CRISTAL INFRARROJO	25316490
LOGO THOMSON LOGO THOMSON SCHRIFTZUG THOMSON MARCHIO THOMSON LOGOTIPO THOMSON	25332060
ON/OFF BUTTON GY20TH TOUCHE MARCHE/ARRET GY20TH EIN-AUS TASTE GY20TH TASTO ACCESO/SPENTO GY20TH TECLA MARCHA/PARADA GY20TH	25454880
BUTTON ASSY GY20TH ENSEMBLE DE TOUCHES GY20TH TASTENEINHEIT GY20TH ASSIEME TASTI GY20TH CONJUNTO DE TECLAS GY20TH	25318340
FOLDING BOX EMBALLAGE CARTON KARTON IMBALLAGGIO CARTONE EMBALAJE CARTON	25317390
FITTING UPPER CALE SUPERIEURE POLSTER OBEN DISTANZIATORE SUPERIORE CALZO SUPERIOR	25317410
FITTING DOWNER CALE INFERIEURE POLSTER UNTEN DISTANZIATORE INFERIORE CALZO INFERIOR	25317400

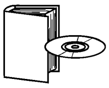

14MG15ET PARTS LIST 14MG15ET LISTE DE PIECES DETACHEES 14MG15ET ERSATZTEILLISTE 14MG15ET LISTA PARTI DI RICAMBIO 14MG15ET LISTA DE PIEZAS DE REPUESTO	35125300
TX807C/CS SERVICE MANUAL TX807C/CS DOC TECHNIQUE TX807C/CS TECHNISCHE DOKUMENTATION TX807C/CS DOCUMENTAZIONE TECNICA TX807C/CS DOCUMENTACION TECNICA	35110300
CDROM TX807 VERSION 2 CDROM TX807 VERSION 2 CDROM TX807 VERSION 2 CDROM TX807 VERSION 2 CDROM TX807 VERSION 2	35110290
TX807C/CS UM D/F/I/GB/GR/DK/NL/S/ E/P/CZ/H/PL/RU/SK TX807C/CS NU D/F/I/GB/GR/DK/NL/S/ E/P/CZ/H/PL/RU/SK TX807C/CS BA D/F/I/GB/GR/DK/NL/S/ E/P/CZ/H/PL/RU/SK TX807C/CS IU D/F/I/GB/GR/DK/NL/S/ E/P/CZ/H/PL/RU/SK TX807C/CS IU D/F/I/GB/GR/DK/NL/S/ E/P/CZ/H/PL/RU/SK	50007930

The description and characteristics given here are of informative significance only, and non committal. To keep up the high quality of our products, we reserve the right to make any changes or improvement without previous notice. • Les descriptions et caractéristiques figurant sur ce document sont données à titre d'information et non d'engagement. En effet, soucieux de la qualité de nos produits, nous nous réservons le droit d'effectuer, sans préavis, toute modification ou amélioration. • Die Beschreibungen und Daten in dieser Anleitung dienen nur zur Information und sind nicht bindend. Um die Qualität unserer Produkte ständig zu verbessern, behalten wir uns das Recht auf Änderungen vor. • Le descrizioni e le caratteristiche date su questo documento sono fornite a semplice titolo informativo e senza impegno. Ci riserviamo il diritto di eseguire, senza preavviso, qualsiasi modifica o miglioramento. • Las descripciones y características que figuran en este documento se dan a título de información y no de compromiso. En efecto, en bien de la calidad de nuestros productos, nos reservamos el derecho de efectuar, sin previo aviso, cualquier modificación o mejora.

THOMSON multimedia S.A au capital de 932 655 840 € - 46, Quai Alphonse Le Gallo 92648 Boulogne Cedex FRANCE - RCS NANTERRE B 333 773 174

THOMSON MULTIMEDIA

TV

Brandt FERGUSON SABA TELEFUNKEN THOMSON

PARTS LIST
LISTE PIECES DETACHEES
ERSATZTEILLISTE
LISTA PARTI DI RICAMBIO
LISTA DE PIEZAS DE REPUESTO

FERGUSON T7017U Chassis TX807CS

MODULES

MAIN	T807CF5C3022043	10684610
EWM	EWM80050	10679310
VSM	SUB VSM80000	10705270

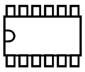

GK101	TSOP1333		25358570
IB001	TDA6107Q/N2		10659660
IF001	TDA8177		15053440
IL101	LM324AN		20679790
IP050	TLP621 GR(D4-LF2 T)	⚠	20827900
IP090	STV8130		10658850
IP095	MC7805/ACT		46007400
IR001	M22W04		10456150
IS001	TDA7263		10281150
IS100	MSP3415D-PO		10648130
IV001	TDA9554PS/N1/1/0274		10649490
ZP092	MP315	⚠	10575090
ZP094	MP32	⚠	25405650

TI030,045	DTC144EK SMD	16007030
TL031,TP032, 053,054,061, 070,TS050,100, 130,TV020,022	BC846B SMD	16006260
TL032,TP022	BC337-40	45001466
TL035	S2055N	20578760
TL050,TP025, 026,031,060, 080,TV021	BC856B SMD	16006310
TL060	RN2417 SMD	25423180
TL061,062	RN1409 SMD	20688820
TL101	IRF630FP	25453960
TP020	STP6NB90FP	25460310
TP058,072,081, TR002	BCR141 SMD	16006890
TP071,TR001	BCR185 SMD	16006900

DB004	1N4004	44009009
DB030,031,050, 051,070,071, DJ120,DL101, DP031,032	BAV21	44044407
DF002,003,101, 102,DH004, DL004,015,030, 060,103,116, 117,DP022,033, 034,035,037, 040,057,058, 070,081,DV070, 071,072	1N4148	44009209
DF010,DL011, 013,035,DP095	1N4001	16008160
DH001	BZX55C30	80444170
DI030,040	BA782S	20542050
DL010,012,025, 040,DP026,090	RGP10G	10459090
DL014	BZX55B15/ZPD15 2%	80444020
DL021	BY228	16008370
DL104,DR001	BZX55B5V1/ZPD5V1 2%	44035702
DL121,122	RGP15G	10272800
DL138	BAT42	16007410
DP001,002,003, 004	BYW27-1000	10455390
DP021	BZX55B16	11073430
DP023	BZX55C7V5	80444150
DP027	BZX55B30	20475340
DP030	BZX55C11	11073670
DP080	MUR460	16009650
DP092	EGP10D	20953640
GE101	LTL307/EE LED	16010330

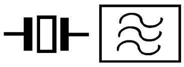

FI010	OFWK6257K FOS	10545030
FI020	OFWK9650M FOS	10545440
FI030	40M4HZ	10664720
FI050	5M74HZ	20338170
QS100	18M432HZ	10334670
QV001	12M0HZ	25418130

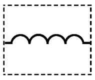

LL122	10636390

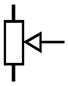

PL140,143	4K7 OHM	10082930
PL141	470R0 OHM	10260250
PP051	470R0 OHM	10260350

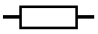

RB001,004, RL026	1K5 OHM 5% 0,50W		10121880
RB013	10R0 OHM 10% 0,50W		15000160
RB031,051,071	560R0 OHM 10% 0,50W		10257590
RF004,006, RK103	1K5 OHM 1% 0,25W		80437630
RF007	1R21 OHM 1% 0,70W		13010820
RF008	2R2 OHM 5% 0,25W	⚠	15009870
RK101	453R0 OHM 1% 0,250W		15018140
RK102	681R0 OHM 1% 0,25W		15020310
RK104	3K32 OHM 1% 0,25W		15017270
RL010	0R1 OHM 10% 0,40W	⚠	15022510
RL012	0R22 OHM 5% 0,50W	⚠	10305450
RL040	47R0 OHM 5% 0,35W	⚠	20923340
RL090	127K0 OHM 1% 0,40W		41310702
RP002	18R0 OHM 220V PTC	⚠	41398800
RP008	4R7 OHM 5% 3W		25477780
RP020	0R68 OHM 5% 2,5W		20822410
RP050	10M0 OHM 5% 0,70W	⚠	10074320
RS039,040,140	4R7 OHM 5% 0,35W	⚠	10226310
RS056	0R47 OHM 10% 0,40W	⚠	15022650
RS160	3R9 OHM 5% 0,25W	⚠	15009970

R : RECYCLED PART
: PIECE RECYCLEE
: AUSTAUSCHTEILE
: RICAMBIO RICICLATO
: MODULO REPROCESADO

For any requests, please contact THOMSON multimedia after sales service area
Pour toutes précisions, contactez votre service apres vente local THOMSON multimedia
Für weitere Auskünfte, wenden Sie sich bitte an die THOMSON multimedia Kundendienste
Per precisazioni, contattare l'assistenza tecnica THOMSON multimedia
Para cualquier pregunta, por favor contactar con el responsable de zona del servicio postventa de THOMSON multimedia

No copying, translation, modification on other use authorized. All rights reserved worldwide. • Tous droits de reproduction, de traduction, d'adaptation et d'exécution réservés pour tous les pays. • Sämtliche Urheberrechte an diesen Texten und Zeichnungen stehen uns zu. Nachdrucke, Vervielfältigungen - auch auszugsweise - nur mit unserer vorherigen Zustimmung zulässig. Alle Rechte vorbehalten. • I diritti di riproduzione, di traduzione, e esecuzione sono riservati per tutti i paesi. • Derechos de reproduccion, de traduccion, de adaptacion y de ejecucion reservados para todos los paises.

Ref	Value		Part No.
CB001	10N0F 3K0V		14036450
CB004	47N0F 5% 250V		40433080
CL003	22N0F 5% 400V		10535740
CL010,012,026, 040,**CP**089,093	330P0F 20% 1K0V		14035270
CL021	14N4F 3,5% 1K6V		10042750
CL024	440N0F 5% 250V		43352100
CL122	27N0F 5% 400V		10263540
CL123	2U7F 10% 100V		10161170
CL144	100P0F 20% 1K0V		14035280
CP001	100N0F 20% 275V	⚠	10331520
CP003	68N0F 20% 250V		10256210
CP004	1N5F 10% 1K0V		20338740
CP005,006	4N7F 1K0V		10058740
CP008	150U0F 20% 400V		13050060
CP009	3N3F 20% 1K6V		10607950
CP050	2N2F 20% 400V	⚠	10344870
CP082	1N0F 10% 500V		10546570

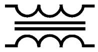

Ref	Value		Part No.
LL005	DSTMH30	⚠	10691490
LL026	23U0H 15%	⚠	10678590
LL032	DRIVER		20936440
LP002	25M0H	⚠	10688710
LP003	SMT	⚠	10693580

OTHER PARTS
AUTRES PIECES
SONSTIGE TEILE
ALTRE PARTI
OTRAS PIEZAS

Ref	Description		Part No.
BB005	CATHODE RAY TUBE SOCKET SUPPORT TUBE CATHODIQUE BILDROEHRENFASSUNG SUPPORTO TUBO CATODICO SOPORTE T.R.C	⚠	80298800
BJ110	CINCH SOCKET PRISE CINCH CINCH-BUCHSE PRESA CINCH TOMA CINCH		10037440
BQ112	HEADPHONE SOCKET PRISE CASQUE KOPFHOERERBUCHSE PRESA JACK TOMA JACK		20345310
BV001	SCART SOCKET PRISE PERITEL EURO-AV-BUCHSE EUROPRESA NORMALIZZATA EUROCONECTOR		10362830
CH200	ON/OFF SWITCH MSB2000 CONTACTEUR MARCHE/ARRET MSB2000 EIN-AUS SCHALTER MSB2000 CONTATTORE ACCESO/ SPENTO MSB2000 CONTACTOR MARCHA/PARADA MSB2000	⚠	10276500
CJ100	THT CABLE 600MM CABLE THT 600MM KABEL THT 600MM CAVO THT 600MM CABLE THT 600MM	⚠	10562580
CJ105	CABLE 460MM 20KV HT STRIPPED CABLE 460MM 20KV HT STRIPPED KABEL 460MM 20KV HT STRIPPED CAVO 460MM 20KV HT STRIPPED CABLE 460MM 20KV HT STRIPPED	⚠	10369650
FP001	1A6T 250V TIME-LAG FUSE 1A6T 250V FUSIBLE TEMPORISE 1A6T 250V SICHERUNG 1A6T 250V FUSIBILE TEMPORIZZATO 1A6T 250V FUSIBLE TEMPORIZADO	⚠	48064700
NH001	CTT5010 UHF/VHF TUNER CTT5010 TETE UHF/VHF CTT5010 UHF/VHF TUNER CTT5010 TUNER UHF/VHF CTT5010 SINTONIZADOR UHF/VHF		20812280
SK101,102,103, 104	MICROSWITCH MICRO CONTACTEUR MIKROSCHALTER MICROINTERRUTTORE MICROCONTACTOR		30011100

EQUIPMENT/PRESENTATION
EQUIPEMENT/PRESENTATION
AUSSTATTUNG/GEHAEUSE
PARTI VARIE
EQUIPO/PRESENTACION

Description		Part No.
FRONT PANEL FACADE FRONTPLATTE PANNELLO FRONTALE PANEL FRONTAL		25371140
REAR PANEL GY20TH DOS GY20TH RUECKWAND GY20TH PANNELLO POSTERIORE GY20TH TAPA POSTERIOR GY20TH	⚠	25450010
INFRARED WINDOW GLACE INFRAROUGE INFRAROTFENSTER VETRO INFRAROSSO CRISTAL INFRARROJO		25361990
LOGO FERGUSON LOGO FERGUSON SCHRIFTZUG FERGUSON MARCHIO FERGUSON LOGOTIPO FERGUSON		25295050
CHASSIS SUPPORT SUPPORT CHASSIS CHASSIS HALTER SUPPORTO CHASSIS SOPORTE CHASSIS		25382530
8R OHM 15W LOUDSPEAKER 60X125 8R OHM 15W HAUT PARLEUR 60X125 8R OHM 15W LAUTSPRECHER 60X125 8R OHM 15W ALTOPARLANTE 60X125 8R OHM 15W ALTAVOZ 60X125		10467060
ON/OFF BUTTON TOUCHE MARCHE/ARRET EIN-AUS TASTE TASTO ACCESO/SPENTO TECLA MARCHA/PARADA		25309090
BUTTON ASSY ENSEMBLE DE TOUCHES TASTENEINHEIT ASSIEME TASTI CONJUNTO DE TECLAS		25312630
POWER SUPPLY LEAD CORDON D'ALIMENTZATION NETZKABEL CAVO DI ALIMENTAZIONE CABLE DE ALIMENTACION	⚠	25420360
CORD STOPPER ATTACHE CORDON SECTEUR ZUGENTLASTUNG BRIDA CORDONE DI ALIMENTAZIONE SUJECION CABLE DE ALIMENTACION		25071420
A66EHJ13X15 CATHODE RAY TUBE A66EHJ13X15 TUBE CATHODIQUE A66EHJ13X15 FARBBILDROEHRE A66EHJ13X15 TUBO CATODICO A66EHJ13X15 T.R.C	⚠	10715790
DEGAUSSING COIL BOBINE DE DEMAGNETISATION ENTMAGNETISIERUNGSSPULE BOBINA DI SMAGNETTIZZAZIONE BOBINA DE DESIMANTACION	⚠	47320183
RCTMB100 REMOTE CONTROL RCTMB100 TELECOMMANDE RCTMB100 FERNBEDIENUNG RCTMB100 TELECOMANDO RCTMB100 TELEMANDO		20879230
FOLDING BOX EMBALLAGE CARTON KARTON IMBALLAGGIO CARTONE EMBALAJE CARTON		25354290
FITTING DOWNER CALE INFERIEURE POLSTER UNTEN DISTANZIATORE INFERIORE CALZO INFERIOR		25325150
FITTING UPPER CALE SUPERIEURE POLSTER OBEN DISTANZIATORE SUPERIORE CALZO SUPERIOR		25325170

MAINTENANCE TOOLS
MAINTENANCE
WERKZEUG FUER DAS GERAET
UTENSILI DI MANUTENZIONE
MANTENIMIENTO

Description	Part No.
TX807C/CS 110D POWER SUPPLY REPAIR KIT TX807C/CS 110D KIT DE MAINTENANCE ALIMENTATION TX807C/CS 110D REPARATURSET NETZTEIL TX807C/CS 110D KIT PER RIPARARE L'ALIMENTAZIONE TX807C/CS 110D KIT DE REPARACION DE L'ALIMENTACION	35135370

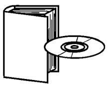

T7017U PARTS LIST T7017U LISTE DE PIECES DETACHEES T7017U ERSATZTEILLISTE T7017U LISTA PARTI DI RICAMBIO T7017U LISTA DE PIEZAS DE REPUESTO	35151780
TX807C/CS SERVICE MANUAL TX807C/CS DOC TECHNIQUE TX807C/CS TECHNISCHE DOKUMENTATION TX807C/CS DOCUMENTAZIONE TECNICA TX807C/CS DOCUMENTACION TECNICA	35110300
TX807C/CS SERVICE MANUAL SUPPLEMENT TX807C/CS DOC TECHNIQUE ADDITIF TX807C/CS SECHNISCHE DOKUMENTATION ZUSAT TX807C/CS DOCUMENTAZIONE ADDITIVO TX807C/CS DOCUMENTACION ADITIVO	35141950
CDROM TX807 VERSION 2 CDROM TX807 VERSION 2 CDROM TX807 VERSION 2 CDROM TX807 VERSION 2 CDROM TX807 VERSION 2	35110290
TX807C/CS UM 10 LANGUAGES TX807C/CS NU 10 LANGUAGES TX807C/CS BA 10 LANGUAGES TX807C/CS IU 10 LANGUAGES TX807C/CS IU 10 LANGUAGES	50011430

OPTION
OPTION
OPTION
OPZIONE
OPCION

ST7040SB TV STAND ST7040SB MEUBLE TV ST7040SB TV-SCHRANK ST7040SB MOBILE TV ST7040SB MUEBLE TV	35151900

The description and characteristics given here are of informative significance only, and non committal. To keep up the high quality of our products, we reserve the right to make any changes or improvement without previous notice. • Les descriptions et caractéristiques figurant sur ce document sont données à titre d'information et non d'engagement. En effet, soucieux de la qualité de nos produits, nous nous réservons le droit d'effectuer, sans préavis, toute modification ou amélioration. • Die Beschreibungen und Daten in dieser Anleitung dienen nur zur Information und sind nicht bindend. Um die Qualität unserer Produkte ständig zu verbessern, behalten wir uns das Recht auf Änderungen vor. • Le descrizioni e le caratteristiche date su questo documento sono fornite a semplice titolo informativo e senza impegno. Ci riserviamo il diritto di eseguire, senza preavviso, qualsiasi modifica o miglioramento. • Las descripciones y características que figuran en este documento se dan a título de información y no de compromiso. En efecto, en bien de la calidad de nuestros productos, nos reservamos el derecho de efectuar, sin previo aviso, cualquier modificación o mejora.

THOMSON multimedia S.A au capital de 994 175 655 € - 46, Quai Alphonse Le Gallo 92648 Boulogne Cedex FRANCE - RCS NANTERRE B 333 773 174

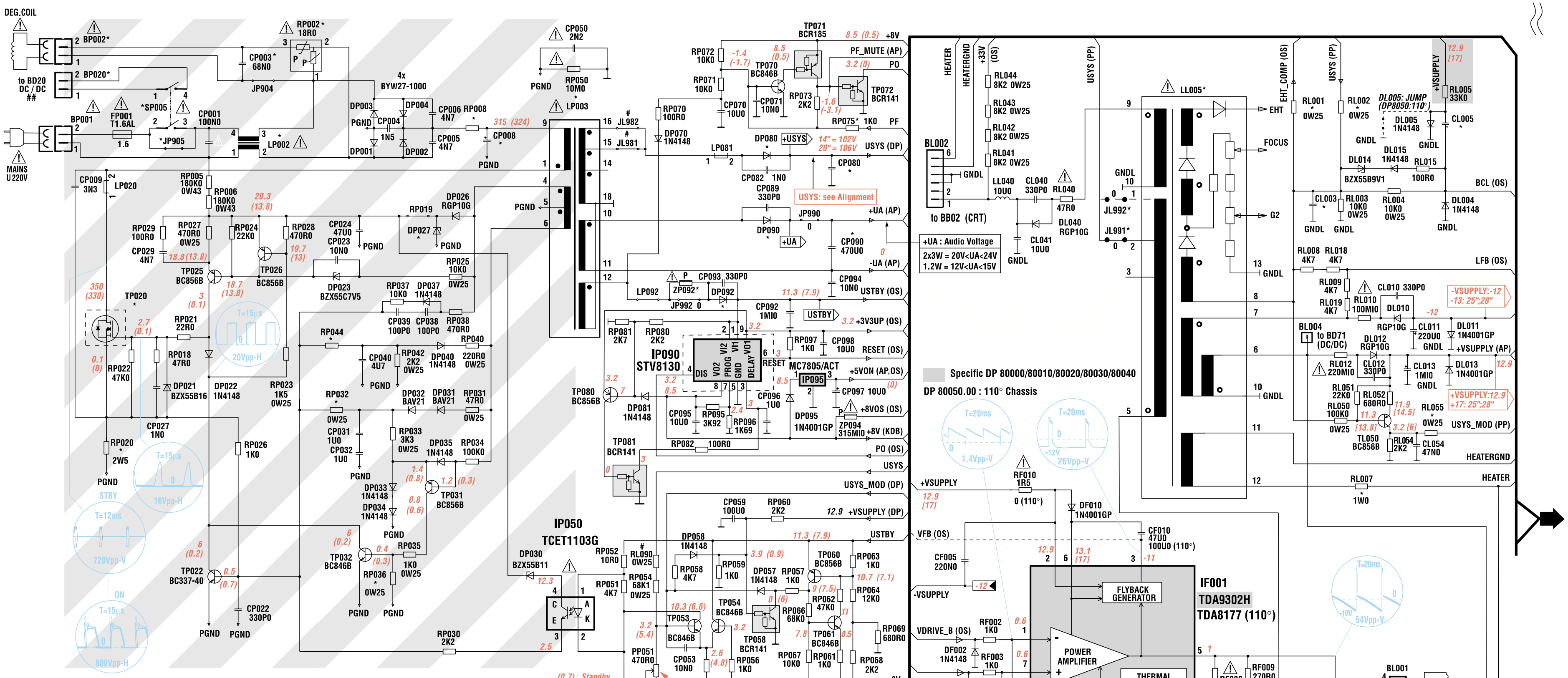

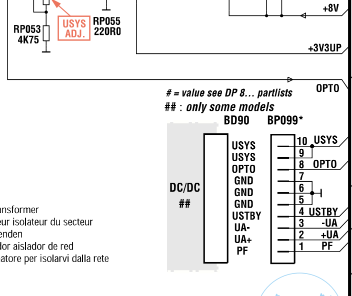

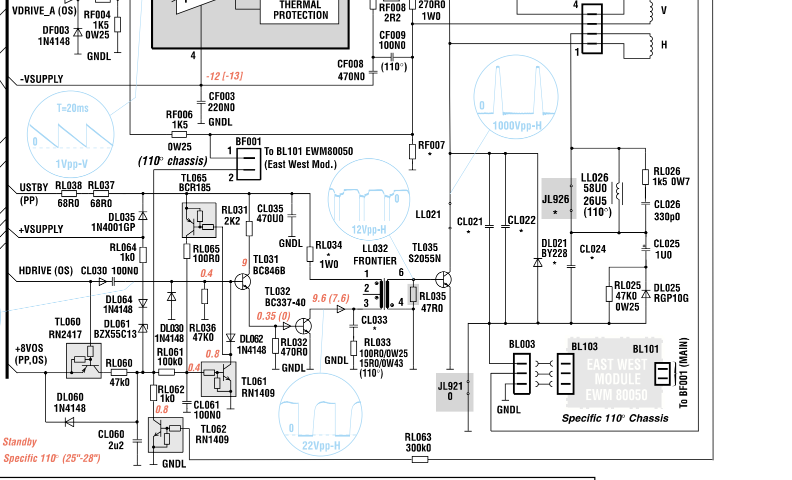

*	PP 80000 PP 80002	PP 80001	PP 80003	PP 80005	PP 80007
BP002	X	X	X	X	-
BP20/99	-	-	-	-	X
CP003	X	X	X	X	-
CP008	68U0	100U0	100U0	150U0	68U0
CP080	100U0	100U0	100U0	220U0	100U0
CP090	16.0V	25.0V	25.0V	25.0V	16.0V
DP027	BZX55B27	BZX55B27	BZX55B27	BZX55B30	BZX55B27
DP080	MUR160	MUR160	MUR160	MUR460	MUR160
DP090	RGP10G	MUR120	MUR120	RGP10G	RGP10G
DP092	MUR120	MUR120	MUR120	EGP10D	EGP10D
JP905	-	-	X	X	-
JP992	X	-	-	-	X
LP002	60M0	60M0	60M0	25M0	12M0
LP003	10658360	10656090	10656090	10693580	10658630
RP002	X	X	X	X	-
RP008	5R1/2.5W	5R1/2.5W	5R1/2.5W	4R7/3W	5R1/2.5W
RP020	1R0	1R0	1R0	680MI0	1R0
RP032	33K0	33K0	33K0	27K0	33K0
RP036	2K2	2K2	2K2	1K8	2K2
RP044	12K0	10K0	10K0	7K5	12K0
RP075	X	-	-	-	X
SP005	X	-	-	X	X
TP020	STP3NB90FP	STP3NB90FP	STP3NB90FP	STP3NB90FP	STP3NB90FP
ZP092	-	MP315	MP315	MP315	-

X : Inserted - : Not inserted

★ Models without SP005

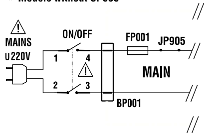

(0.7) : Standby

Use isolating mains transformer
Utilise un transformateur isolateur du secteur
Einen Trenntrafo verwenden
Utilizar un transformador aislador de red
Utilizzare un transformatore per isolarvi dalla rete

Part of board connected to mains supply.
Partie du chassis reliée au secteur.
Primärseite des Netzteils.
Parte dello châssis collegata alla rete.
Parte del chasis conectada a la red.

*	CL003	CL005	CL021	CL022	CL024	CL033	DL021	LL005	RF007	RF010	RL001	RL002	RL007	RL034	RL055	JL926	JL991	JL992
DP 80000 90° 4/3 10" Mini Neck	10N	4U7	6N6	330P	390N0	22N0	-	10658460	1R82	1R5	82K0	120K0	2R2 0.43W	47R0 1W0	68K0	X	-	X
DP 80010 90° 4/3 14" Mini Neck	10N	4U7	6N6	330P	440N0	22N0	-	10658340	1R82	1R5	82K0	100K0	2R2 1W0	39R0 1W0	68K0	X	-	X
DP 80020 90° 4/3 17" Mini Neck	10N	4U7	7N6	-	330N0	22N0	-	10658470	1R5	1R5	82K0	91K0	2R2 0.43W	33R0 1W0	68K0	X	X	-
DP 80030 90° 4/3 20" Narrow Neck	10N	4U7	7N6	-	440N0	22N0	-	10658470	1R5	1R5	82K0	82K0	1R0 1W0	33R0 1W0	68K0	X	-	X
DP 80040 90° 4/3 21" Narrow Neck	10N	4U7	8N3	-	440N0	22N0	-	10654690	1R21	1R5	91K0	91K0	1R0 1W0	27R0 1W0	68K0	-	-	X
DP 80050 110° 4/3 25" - 21"Narrow Neck	22N	2U2	14N6	-	440N0	100N0	X	10654690	1R21	0	220K0	91K0	1R0 1W0	10R0 0W43	220K0	-	-	X

Note :
Power Supply primary circuit measurements.
- Use only (**PGND**) connection point.

Attention :
Mesure dans la partie primaire de l'alimentation
- Utiliser la masse du bloc alimentation (**PGND**).

Achtung :
Bei Messungen im Primärnetzteil
- Primärnetzteilmasse verwenden (**PGND**).

Attenzione :
misure nell'alimentatore primario
- usare massa alimentazione primario (**PGND**).

Cuidado :
Medida en el bloque de alimentacion
- Utilizar la masa del bloque de alimentacion (**PGND**).

⚠ Indicates critical safety components, and identical components should be used for replacement. Only then can the operational safety be garanteed.

Le remplacement des éléments de sécurité (repérés avec le symbole ⚠ par des composants non homologués selon la Norme CEI 65 entraine la non-conformité de l'appareil. Dans ce cas, la responsabilité du fabricant n'est plus engagée.

Wenn Sicherheitsteile (mit dem Symbol ⚠ gekennzeichnet) durch nicht normgerechte Teile ersetzt werden, erlischt die Haftung des Herstellers.

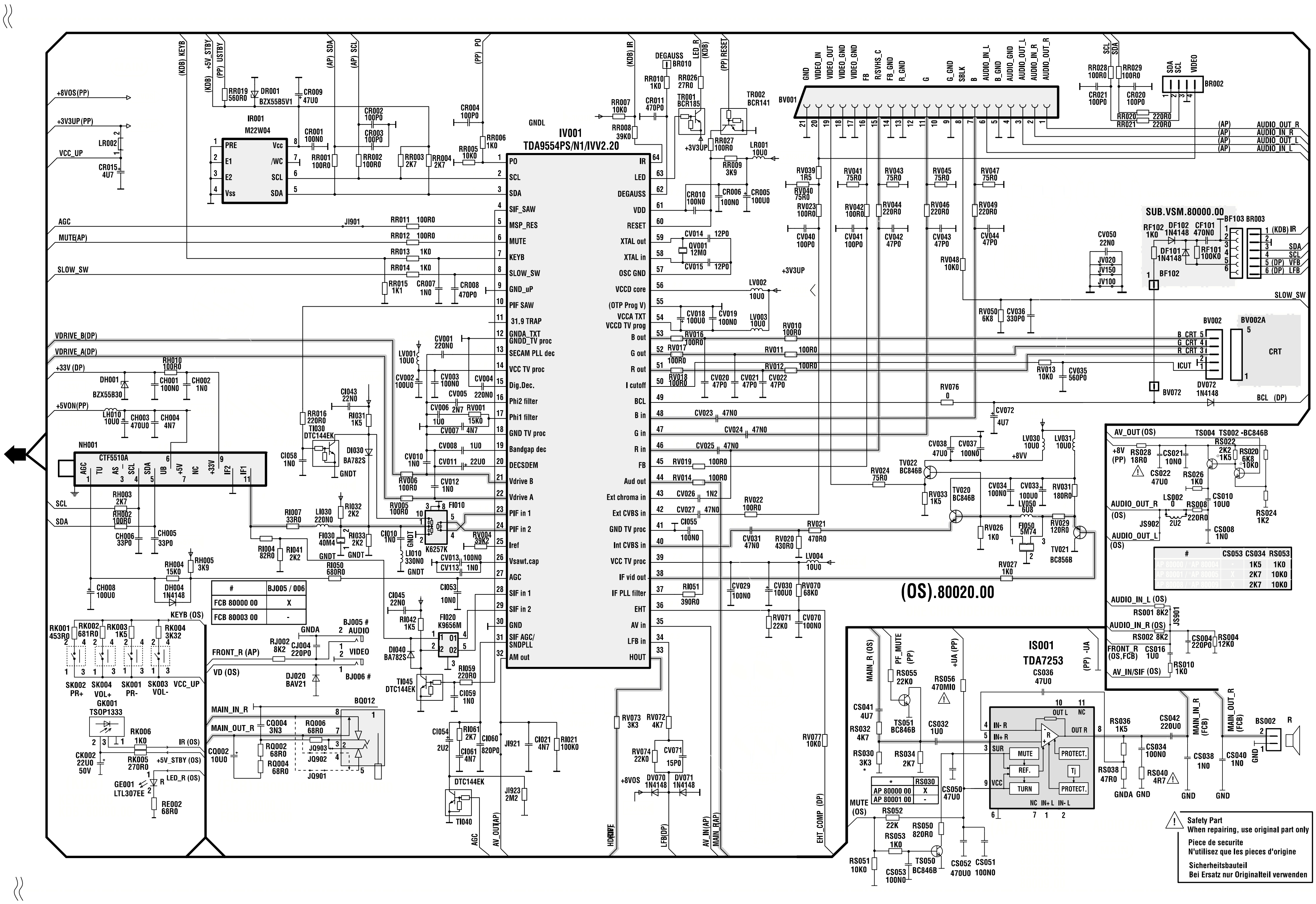
IV001
TDA9554PS/N1/IVV2.20
IR001
M22W04
NH001
CTF5510A
IS001
TDA7253
SUB.VSM.80000.00
(OS).80020.00
BV001
BV002
BV002A
CRT
BQ012
GK001
TSOP1333
GE001
LTL307EE
+8V0S(PP)
+3V3UP(PP)
VCC_UP
AGC
MUTE(AP)
SLOW_SW
VDRIVE_B(DP)
VDRIVE_A(DP)
+33V (DP)
+5V0N(PP)
SCL
SDA
KEYB (OS)
FRONT_R (AP)
VD (OS)
MAIN_IN_R
MAIN_OUT_R
AUDIO_OUT_R
AUDIO_IN_R
AUDIO_OUT_L
AUDIO_IN_L
AV_OUT (OS)
AV_IN/SIF (OS)
BCL (DP)
SK002 PR+
SK004 VOL+
SK001 PR-
SK003 VOL-
IR (OS)
+5V_STBY (OS)
LED_R (OS)

#	BJ005 / 006
FCB 80000 00	X
FCB 80003 00	-

#	CS053	CS034	RS053
(OS) 80000 / AP 80000	-	1K5	1K0
(OS) 80001 / AP 80006	X	2K7	10K0
(OS) 80002 / AP 80000	X	2K7	10K0

*	RS030
AP 80000 00	X
AP 80001 00	-

Safety Part
When repairing, use original part only
Piece de securite
N'utilisez que les pieces d'origine
Sicherheitsbauteil
Bei Ersatz nur Originalteil verwenden

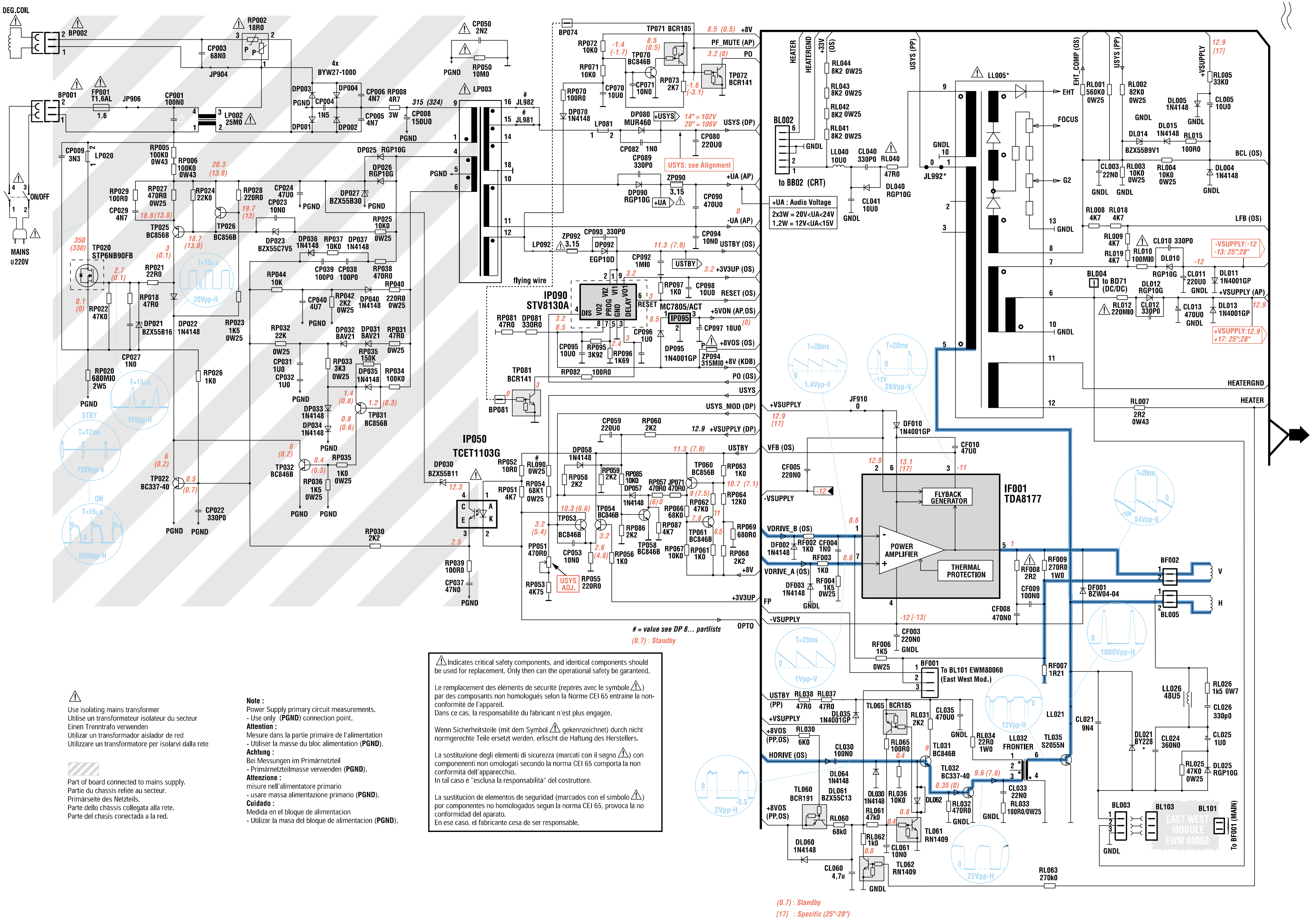

⚠
Use isolating mains transformer
Utilise un transformateur isolateur du secteur
Einen Trenntrafo verwenden
Utilizar un transformador aislador de red
Utilizzare un transformatore per isolarvi dalla rete

Part of board connected to mains supply.
Partie du chassis reliée au secteur.
Primärseite des Netzteils.
Parte dello chássis collegata alla rete.
Parte del chasis conectada a la red.

Note :
Power Supply primary circuit measurements.
- Use only **(PGND)** connection point.

Attention :
Mesure dans la partie primaire de l'alimentation
- Utiliser la masse du bloc alimentation **(PGND)**.

Achtung :
Bei Messungen im Primärnetzteil
- Primärnetzteilmasse verwenden **(PGND)**.

Attenzione :
misure nell'alimentatore primario
- usare massa alimentazione primario **(PGND)**.

Cuidado :
Medida en el bloque de alimentacion
- Utilizar la masa del bloque de alimentacion **(PGND)**.

⚠ Indicates critical safety components, and identical components should be used for replacement. Only then can the operational safety be garanteed.

Le remplacement des éléments de sécurité (repérés avec le symbole ⚠) par des composants non homologués selon la Norme CEI 65 entraine la non-conformité de l'appareil.
Dans ce cas, la responsabilité du fabricant n'est plus engagée.

Wenn Sicherheitsteile (mit dem Symbol ⚠ gekennzeichnet) durch nicht normgerechte Teile ersetzt werden, erlischt die Haftung des Herstellers.

La sostituzione degli elementi di sicurezza (marcati con il segno ⚠) con componenenti non omologati secondo la norma CEI 65 comporta la non conformità dell'apparecchio.
In tal caso è "esclusa la responsabilità" del costruttore.

La sustitución de elementos de seguridad (marcados con el simbolo ⚠) por componentes no homologados segun la norma CEI 65, provoca la no conformidad del aparato.
En ese caso, el fabricante cesa de ser responsable.

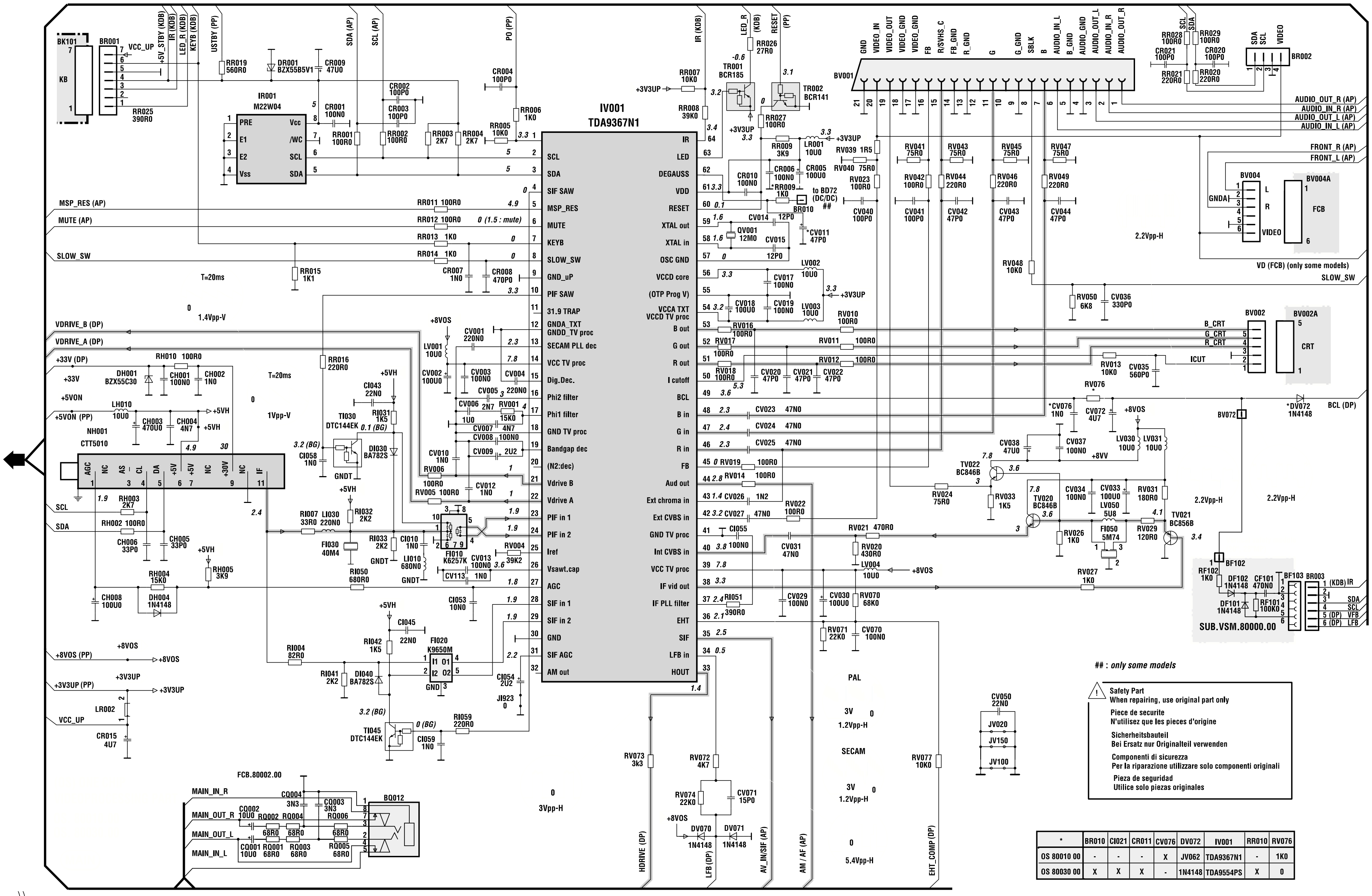

Safety Part
When repairing, use original part only

Piece de securite
N'utilisez que les pieces d'origine

Sicherheitsbauteil
Bei Ersatz nur Originalteil verwenden

Componenti di sicurezza
Per la riparazione utilizzare solo componenti originali

Pieza de seguridad
Utilice solo piezas originales

*	BR010	CI021	CR011	CV076	DV072	IV001	RR010	RV076
OS 80010 00	-	-	-	X	JV062	TDA9367N1	-	1K0
OS 80030 00	X	X	X	-	1N4148	TDA9554PS	X	0

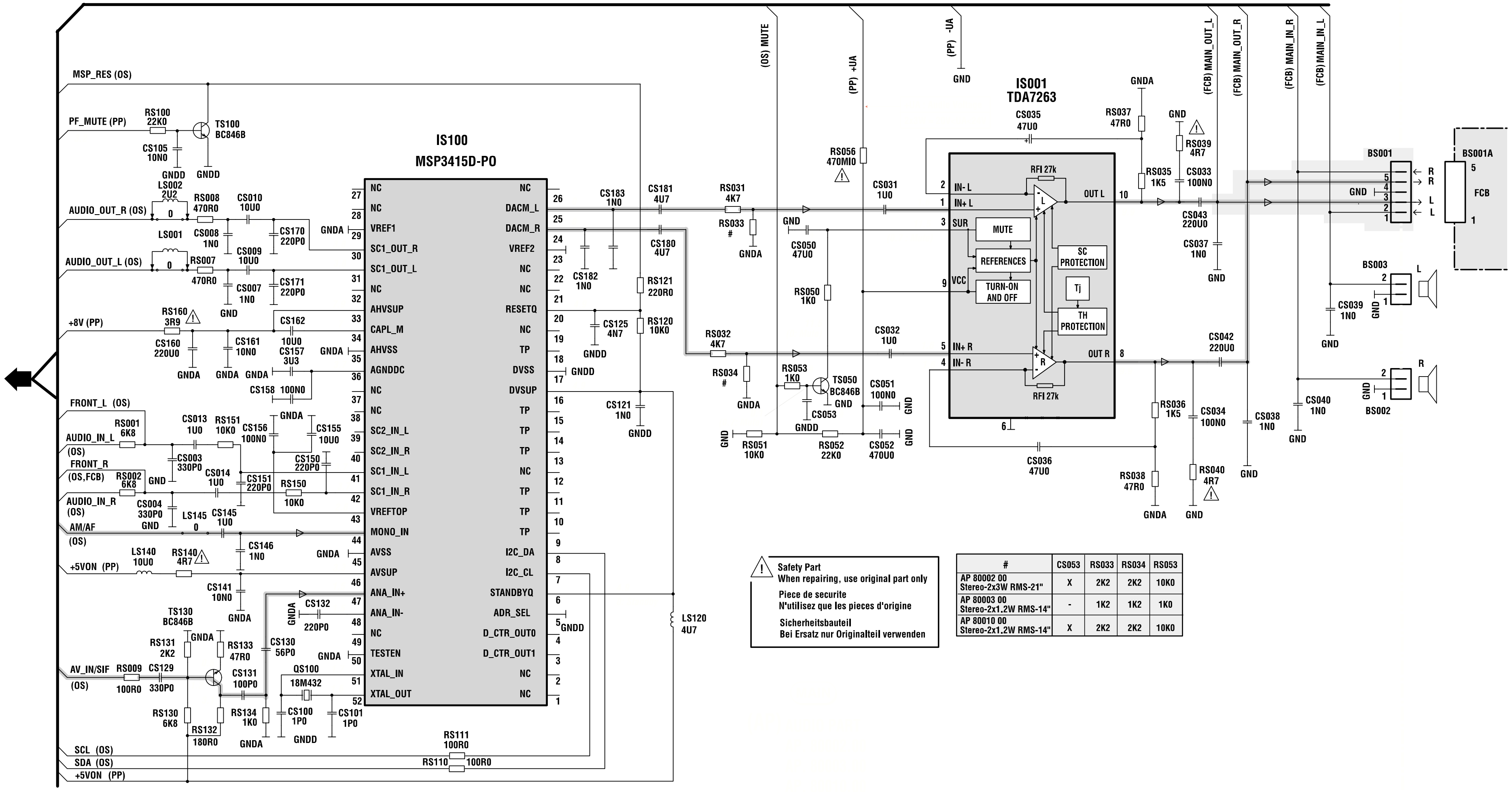

⚠ Safety Part
When repairing, use original part only
Piece de securite
N'utilisez que les pieces d'origine
Sicherheitsbauteil
Bei Ersatz nur Originalteil verwenden

#	CS053	RS033	RS034	RS053
AP 80002 00 Stereo-2x3W RMS-21"	X	2K2	2K2	10K0
AP 80003 00 Stereo-2x1.2W RMS-14"	-	1K2	1K2	1K0
AP 80010 00 Stereo-2x1.2W RMS-14"	X	2K2	2K2	10K0

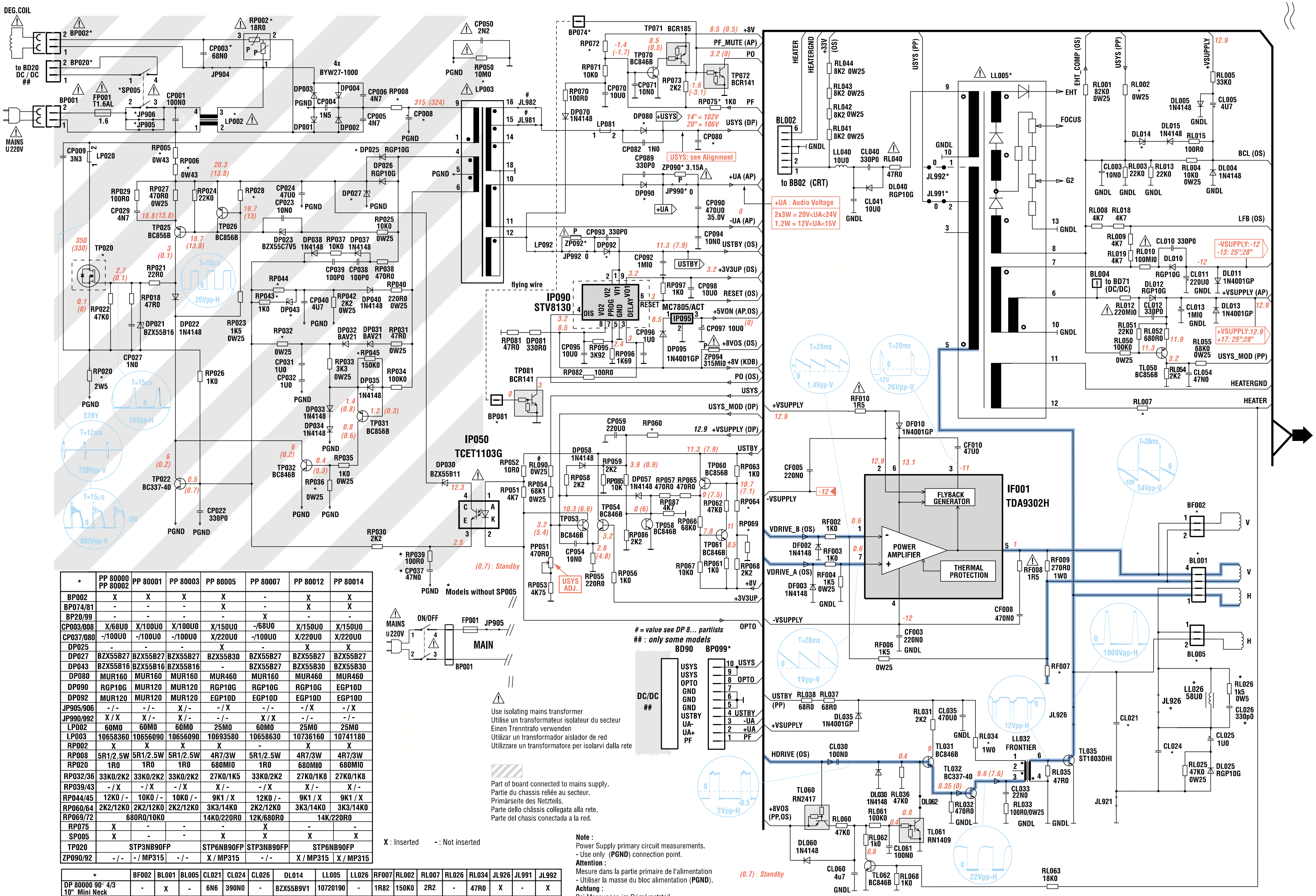

Use isolating mains transformer
Utilise un transformateur isolateur du secteur
Einen Trenntrafo verwenden
Utilizar un transformador aislador de red
Utilizzare un transformatore per isolarvi dalla rete

Part of board connected to mains supply.
Partie du chassis reliée au secteur.
Primärseite des Netzteils.
Parte dello châssis collegata alla rete.
Parte del chasis conectada a la red.

*	PP 80000 PP 80002	PP 80001	PP 80003	PP 80005	PP 80007	PP 80012	PP 80014
BP002	X	X	X	X	-	X	X
BP074/81	-	-	-	X	-	X	X
BP20/99	-	-	-	-	X	-	-
CP003/008	X/68U0	X/100U0	X/100U0	X/150U0	-/68U0	X/150U0	X/150U0
CP037/080	-/100U0	-/100U0	-/100U0	X/220U0	-/100U0	X/220U0	X/220U0
DP025	-	-	-	X	-	X	X
DP027	BZX55B27	BZX55B27	BZX55B27	BZX55B30	BZX55B27	BZX55B27	BZX55B27
DP043	BZX55B16	BZX55B16	BZX55B16	-	BZX55B27	BZX55B30	BZX55B30
DP080	MUR160	MUR160	MUR160	MUR460	MUR160	MUR460	MUR460
DP090	RGP10G	MUR120	MUR120	RGP10G	RGP10G	RGP10G	EGP10D
DP092	MUR120	MUR120	MUR120	EGP10D	EGP10D	EGP10D	EGP10D
JP905/906	- / -	- / -	X / -	- / X	- / -	- / X	- / X
JP990/992	X / X	X / -	X / -	- / -	X / X	- / -	- / -
LP002	60M0	60M0	60M0	25M0	60M0	25M0	25M0
LP003	10658360	10656090	10656090	10693580	10658630	10736160	10741180
RP002	X	X	X	X	-	X	X
RP008	5R1/2.5W	5R1/2.5W	5R1/2.5W	4R7/3W	5R1/2.5W	4R7/3W	4R7/3W
RP020	1R0	1R0	1R0	680MI0	1R0	680MI0	680MI0
RP032/36	33K0/2K2	33K0/2K2	33K0/2K2	27K0/1K5	33K0/2K2	27K0/1K8	27K0/1K8
RP039/43	- / X	- / X	- / X	X / -	- / X	X / -	X / -
RP044/45	12K0 / -	10K0 / -	10K0 / -	9K1 / X	12K0 / -	9K1 / X	9K1 / X
RP060/64	2K2/12K0	2K2/12K0	2K2/12K0	3K3/14K0	2K2/12K0	3K3/14K0	3K3/14K0
RP069/72	680R0/10K0			14K0/220R0	12K/680R0	14K/220R0	
RP075	X	-	-	-	X	-	-
SP005	X	-	-	X	X	X	X
TP020	STP3NB90FP			STP6NB90FP	STP3NB90FP	STP6NB90FP	
ZP090/92	- / -	- / MP315	- / -	X / MP315	- / -	X / MP315	X / MP315

X : Inserted   - : Not inserted

*	BF002	BL001	BL005	CL021	CL024	CL026	DL014	LL005	LL026	RF007	RL002	RL007	RL026	RL034	JL926	JL991	JL992
DP 80000 90° 4/3 10" Mini Neck	-	X	-	6N6	390N0	-	BZX55B9V1	10720190	-	1R82	150K0	2R2	-	47R0	X	-	X
DP 80010 90° 4/3 14" Mini Neck	-	X	-	6N6	440N0	-	BZX55B9V1	10720200	-	1R82	100K0	2R2	-	39R0	X	-	X
DP 80020 90° 4/3 17" Mini Neck	-	X	-	7N6	390N0	-	BZX55B9V1	10658470	-	1R5	91K0	2R2	-	33R0	X	X	-
DP 80030 90° 4/3 20" Narrow Neck	X	-	X	7N6	560N0	-	BZX55B11	10658470	-	1R5	82K0	1R0	-	33R0	X	-	X
DP 80040 90° 4/3 21" Narrow Neck	X	-	X	8N3	440N0	X	BZX55B11	10654690	X	1R21	91K0	1R0	X	22R0	-	-	X

Note :
Power Supply primary circuit measurements.
- Use only (**PGND**) connection point.

Attention :
Mesure dans la partie primaire de l'alimentation
- Utiliser la masse du bloc alimentation (**PGND**).

Achtung :
Bei Messungen im Primärnetzteil
- Primärnetzteilmasse verwenden (**PGND**).

Attenzione :
misure nell'alimentatore primario
- usare massa alimentazione primario (**PGND**).

Cuidado :
Medida en el bloque de alimentacion
- Utilizar la masa del bloque de alimentacion (**PGND**).

⚠ Indicates critical safety components, and identical components should be used for replacement. Only then can the operational safety be garanteed.

Le remplacement des éléments de sécurité (repérés avec le symbole ⚠ par des composants non homologués selon la Norme CEI 65 entraine la non-conformité de l'appareil. Dans ce cas, la responsabilité du fabricant n'est plus engagée.

Wenn Sicherheitsteile (mit dem Symbol ⚠ gekennzeichnet) durch nicht normgerechte Teile ersetzt werden, erlischt die Haftung des Herstellers.

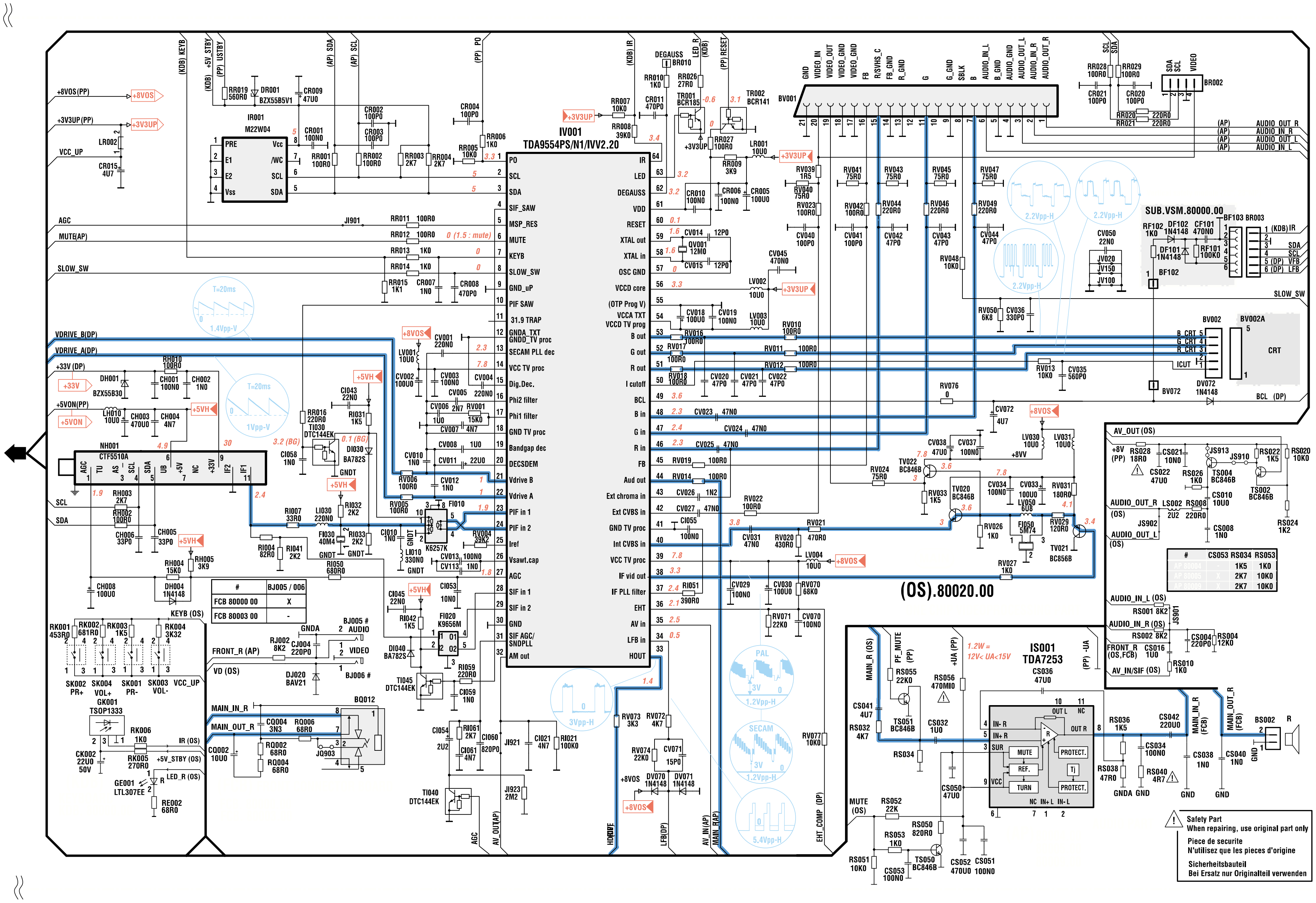
IV001
TDA9554PS/N1/IVV2.20
IR001
M22W04
NH001
CTF5510A
SUB.VSM.80000.00
(OS).80020.00
IS001
TDA7253
BV002
CRT
BQ012
AV_OUT (OS)
+8VOS (PP)
+3V3UP (PP)
VCC_UP
AGC
MUTE(AP)
SLOW_SW
VDRIVE_B(DP)
VDRIVE_A(DP)
+33V (DP)
+5VON(PP)
SCL
SDA
KEYB (OS)
FRONT_R (AP)
VD (OS)
MAIN_IN_R
MAIN_OUT_R
SK002 PR+
SK004 VOL+
SK001 PR-
SK003 VOL-
GK001 TSOP1333
LED_R (OS)
+5V_STBY (OS)
IR (OS)
AUDIO_OUT_R
AUDIO_IN_R
AUDIO_OUT_L
AUDIO_IN_L
SLOW_SW
BCL (DP)
T=20ms
1.4Vpp-V
1Vpp-V
2.2Vpp-H
3Vpp-H
PAL
1.2Vpp-H
SECAM
5.4Vpp-H
Safety Part
When repairing, use original part only
Piece de securite
N'utilisez que les pieces d'origine
Sicherheitsbauteil
Bei Ersatz nur Originalteil verwenden

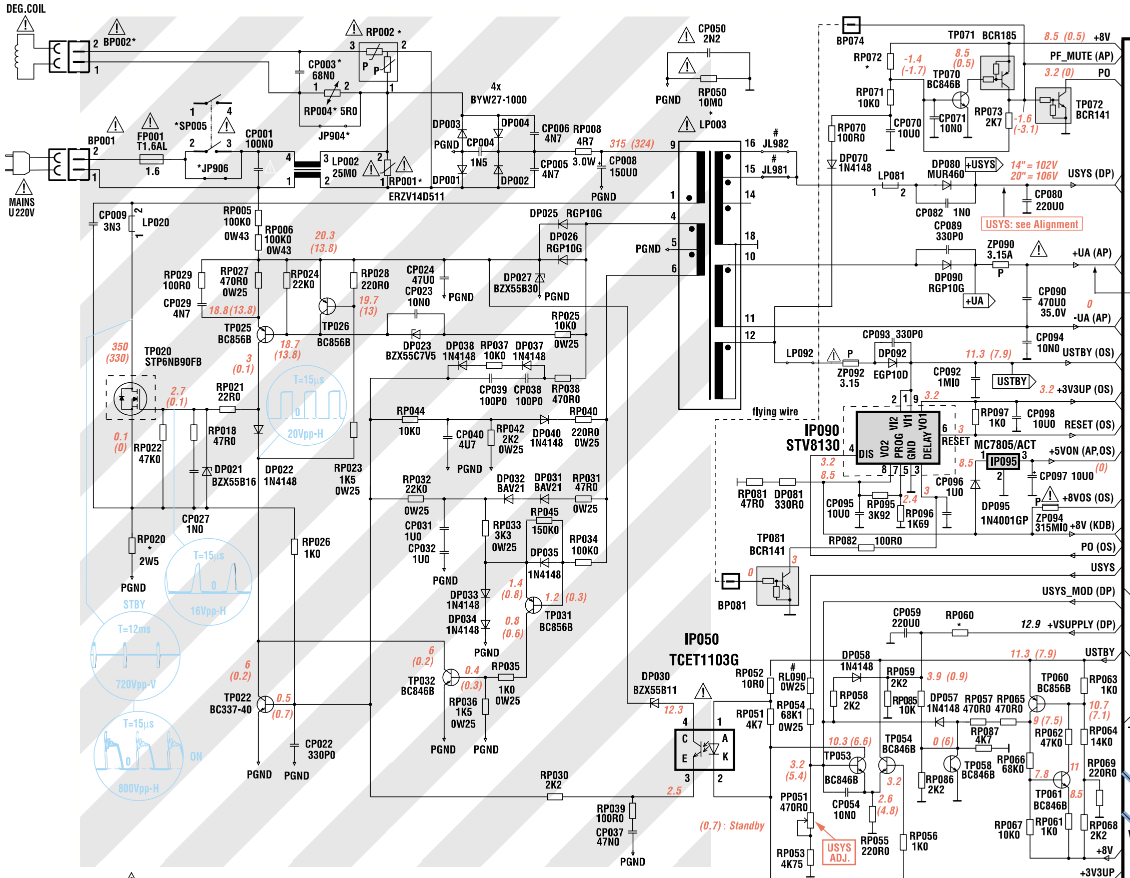

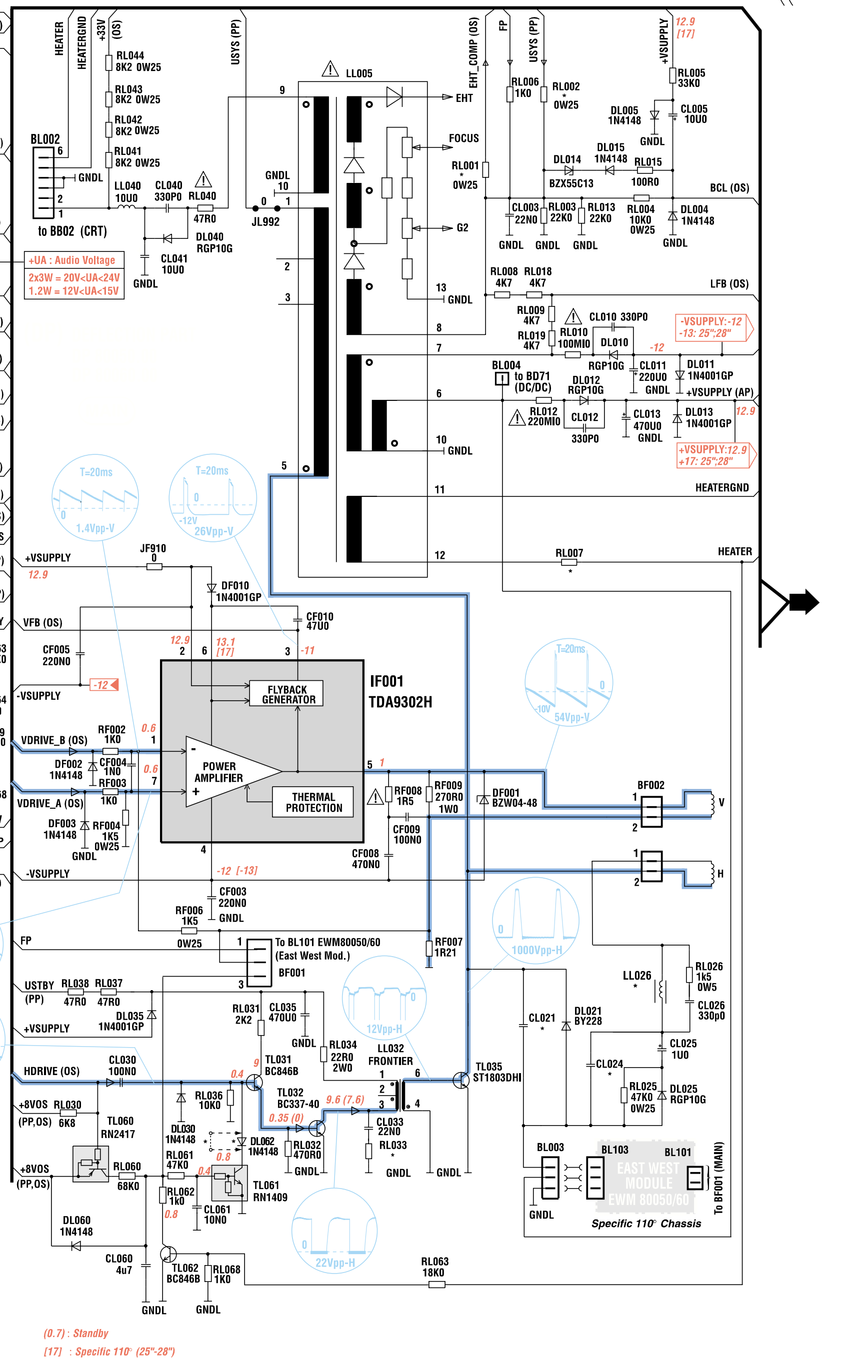

Use isolating mains transformer
Utilise un transformateur isolateur du secteur
Einen Trenntrafo verwenden
Utilizar un transformador aislador de red
Utilizzare un transformatore per isolarvi dalla rete

* Models without SP005

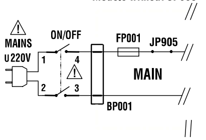

Part of board connected to mains supply.
Partie du chassis reliée au secteur.
Primärseite des Netzteils.
Parte dello châssis collegata alla rete.
Parte del chasis conectada a la red.

*	JP904	JP906	LP003	RP001	RP002	RP004	RP072	SP005
PP 80009 00	X	X	10713640	-	18R0	-	9K1	-
PP 80010 00	X	-	10713640	-	18R0	-	9K1	X
PP 80011 00	-	X	10713640	X	9R0	X	14K0	-
PP 80013 00	X	X	10736160	-	18R0	-	10K0	-

*	CL021	CL024	DL062	LL026	RL001	RL002	RL007	RL033
DP 80050 Chasis 110° 25" - 28" MP	14N6	440N0	WIRE	26U5	330K0 0W25	91K0 0W25	1R0 1W	150R0 0W43
DP 80060 Chasis 110° 21" XF	9N4	330N0	X	48U5	560K0 0W25	82K0 0W25	2R2 0W43	100R0 0W25

X : Inserted **-** : Not inserted

Note :
Power Supply primary circuit measurements.
- Use only (**PGND**) connection point.

Attention :
Mesure dans la partie primaire de l'alimentation
- Utiliser la masse du bloc alimentation (**PGND**).

Achtung :
Bei Messungen im Primärnetzteil
- Primärnetzteilmasse verwenden (**PGND**).

Attenzione :
misure nell'alimentatore primario
- usare massa alimentazione primario (**PGND**).

Cuidado :
Medida en el bloque de alimentacion
- Utilizar la masa del bloque de alimentacion (**PGND**).

⚠ Indicates critical safety components, and identical components should be used for replacement. Only then can the operational safety be garanteed.

Le remplacement des éléments de sécurité (repérés avec le symbole ⚠ par des composants non homologués selon la Norme CEI 65 entraine la non-conformité de l'appareil. Dans ce cas, la responsabilité du fabricant n'est plus engagée.

Wenn Sicherheitsteile (mit dem Symbol ⚠ gekennzeichnet) durch nicht normgerechte Teile ersetzt werden, erlischt die Haftung des Herstellers.

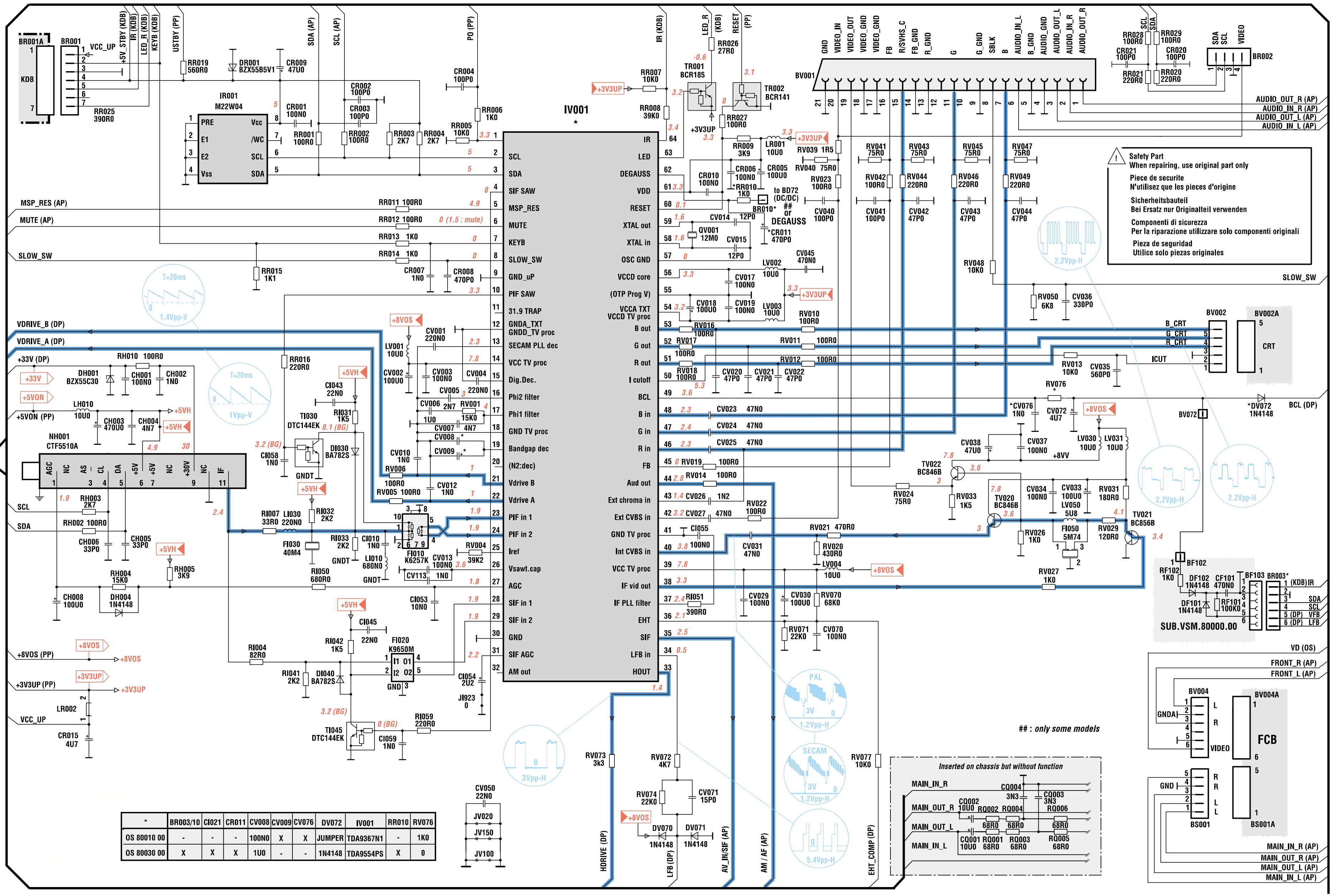

*	BR003/10	CI021	CR011	CV008	CV009	CV076	DV072	IV001	RR010	RV076
OS 80010 00	-	-	-	100N0	X	X	JUMPER	TDA9367N1	-	1K0
OS 80030 00	X	X	X	1U0	-	-	1N4148	TDA9554PS	X	0

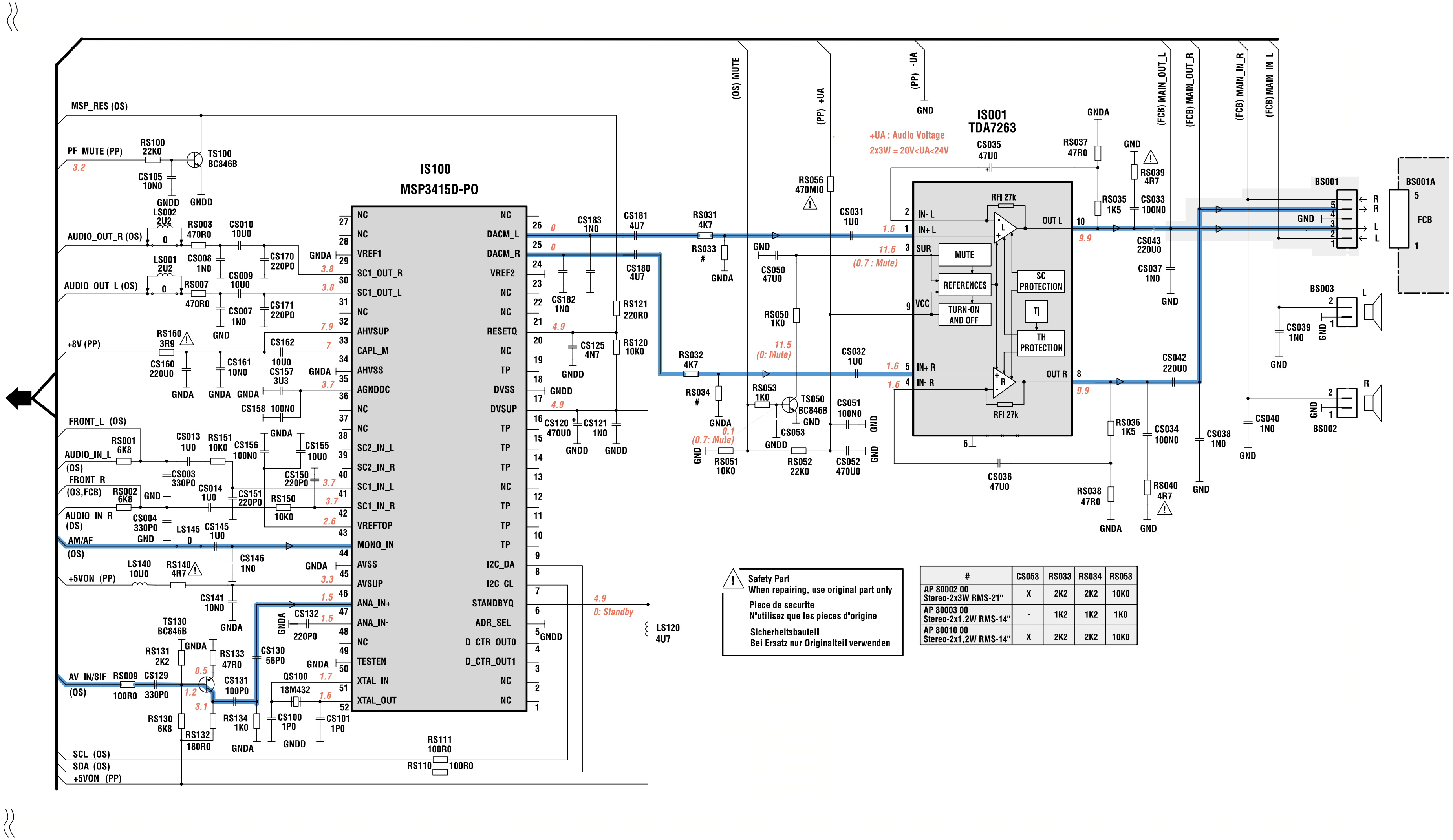

⚠ Safety Part
When repairing, use original part only
Piece de securite
N'utilisez que les pieces d'origine
Sicherheitsbauteil
Bei Ersatz nur Originalteil verwenden

#	CS053	RS033	RS034	RS053
AP 80002 00 Stereo-2x3W RMS-21"	X	2K2	2K2	10K0
AP 80003 00 Stereo-2x1.2W RMS-14"	-	1K2	1K2	1K0
AP 80010 00 Stereo-2x1.2W RMS-14"	X	2K2	2K2	10K0

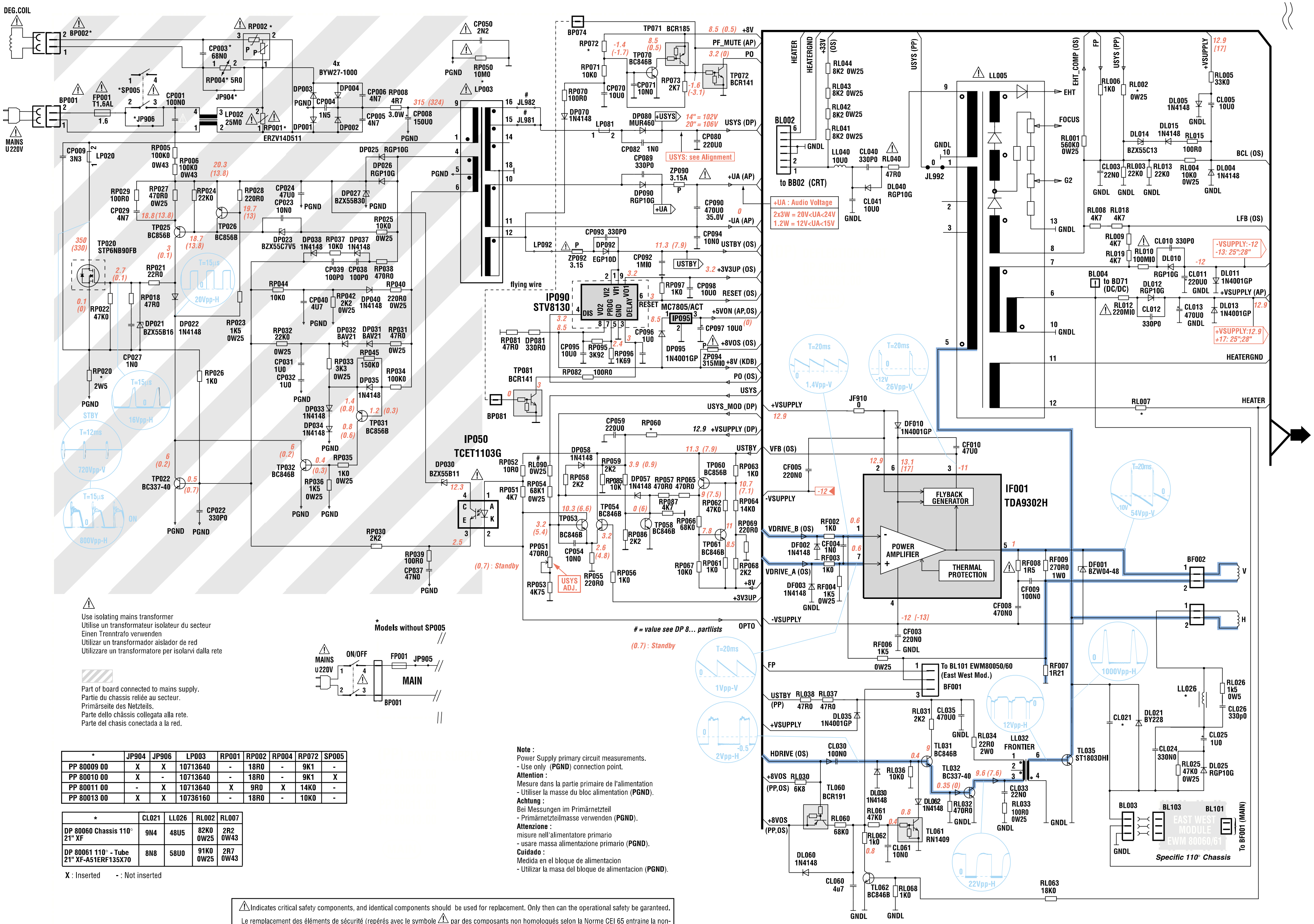

⚠
Use isolating mains transformer
Utilise un transformateur isolateur du secteur
Einen Trenntrafo verwenden
Utilizar un transformador aislador de red
Utilizzare un transformatore per isolarvi dalla rete

Part of board connected to mains supply.
Partie du chassis reliée au secteur.
Primärseite des Netzteils.
Parte dello châssis collegata alla rete.
Parte del chasis conectada a la red.

*	JP904	JP906	LP003	RP001	RP002	RP004	RP072	SP005
PP 80009 00	X	X	10713640	-	18R0	-	9K1	-
PP 80010 00	X	-	10713640	-	18R0	-	9K1	X
PP 80011 00	-	X	10713640	X	9R0	X	14K0	-
PP 80013 00	X	X	10736160	-	18R0	-	10K0	-

*	CL021	LL026	RL002	RL007
DP 80060 Chassis 110° 21" XF	9N4	48U5	82K0 0W25	2R2 0W43
DP 80061 110° - Tube 21" XF-A51ERF135X70	8N8	58U0	91K0 0W25	2R7 0W43

X : Inserted **-** : Not inserted

Note :
Power Supply primary circuit measurements.
- Use only (**PGND**) connection point.

Attention :
Mesure dans la partie primaire de l'alimentation
- Utiliser la masse du bloc alimentation (**PGND**).

Achtung :
Bei Messungen im Primärnetzteil
- Primärnetzteilmasse verwenden (**PGND**).

Attenzione :
misure nell'alimentatore primario
- usare massa alimentazione primario (**PGND**).

Cuidado :
Medida en el bloque de alimentacion
- Utilizar la masa del bloque de alimentacion (**PGND**).

⚠ Indicates critical safety components, and identical components should be used for replacement. Only then can the operational safety be garanteed.

Le remplacement des éléments de sécurité (repérés avec le symbole ⚠) par des composants non homologués selon la Norme CEI 65 entraine la non-conformité de l'appareil. Dans ce cas, la responsabilité du fabricant n'est plus engagée.

Wenn Sicherheitsteile (mit dem Symbol ⚠ gekennzeichnet) durch nicht normgerechte Teile ersetzt werden, erlischt die Haftung des Herstellers.

(0.7) : Standby
[17] : Specific 110° (25"-28")

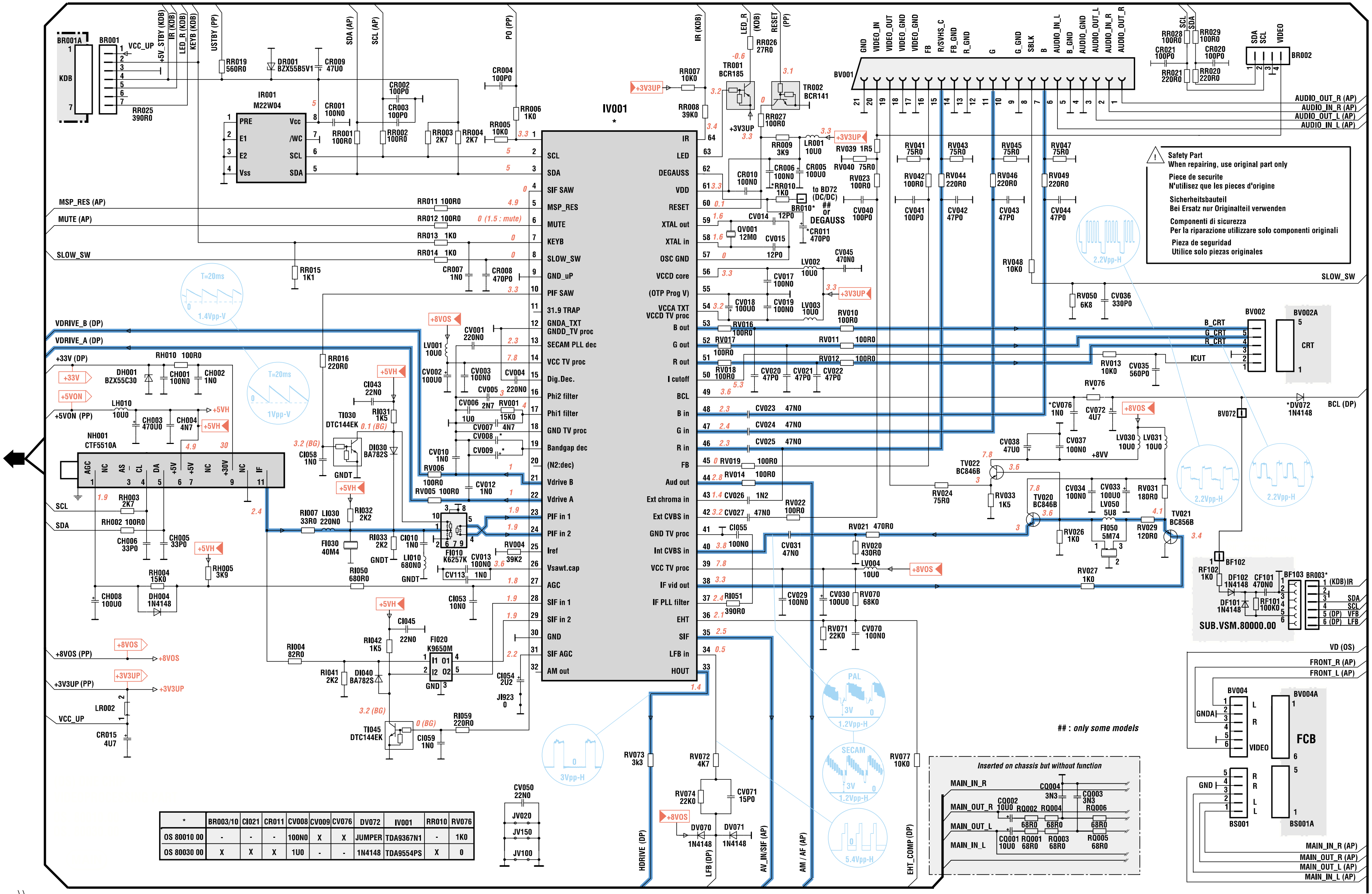

*	BR003/10	CI021	CR011	CV008	CV009	CV076	DV072	IV001	RR010	RV076
OS 80010 00	-	-	-	100N0	X	X	JUMPER	TDA9367N1	-	1K0
OS 80030 00	X	X	X	1U0	-	-	1N4148	TDA9554PS	X	0

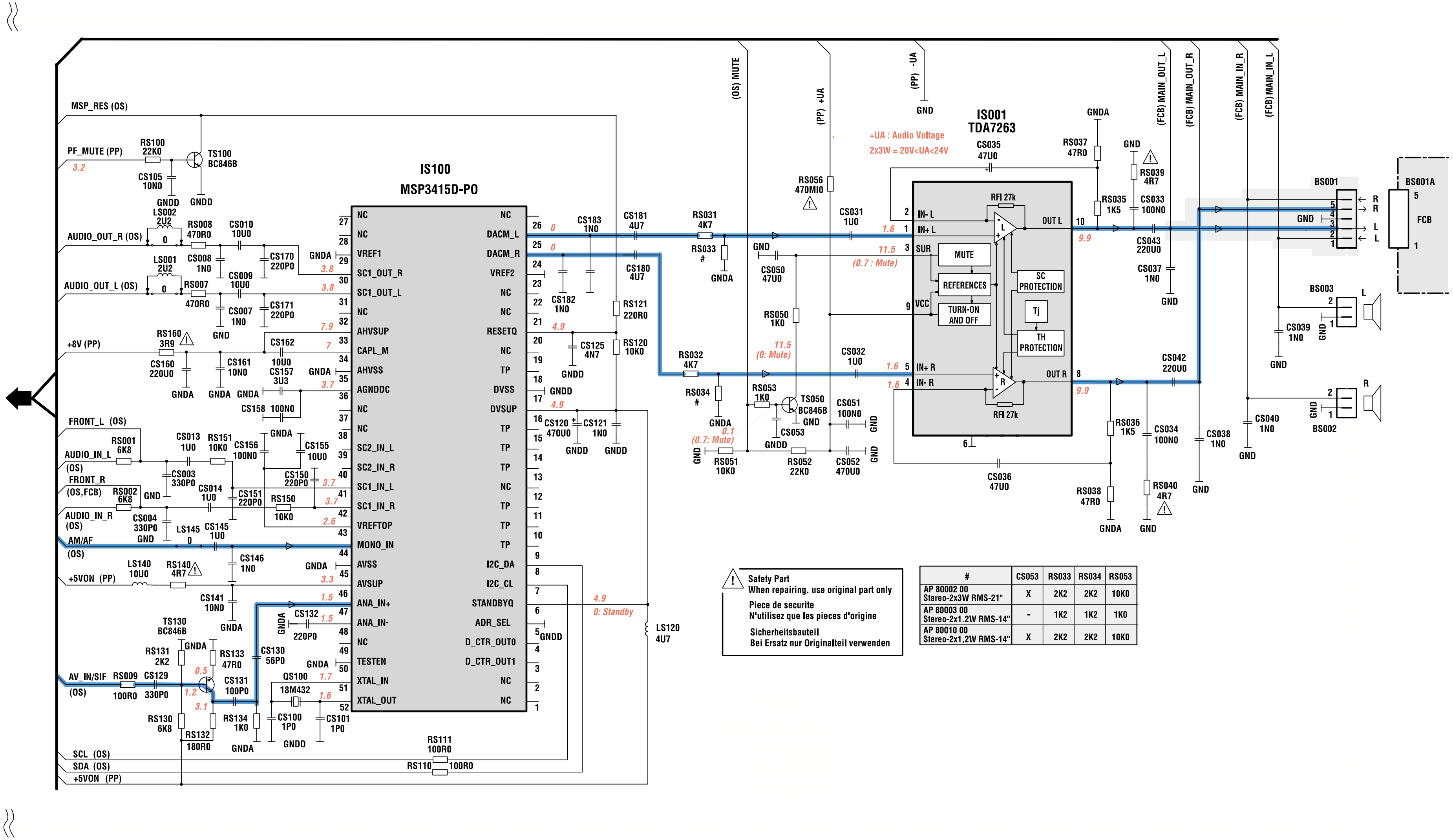

Safety Part
When repairing, use original part only
Piece de securite
N'utilisez que les pieces d'origine
Sicherheitsbauteil
Bei Ersatz nur Originalteil verwenden

#	CS053	RS033	RS034	RS053
AP 80002 00 Stereo-2x3W RMS-21"	X	2K2	2K2	10K0
AP 80003 00 Stereo-2x1.2W RMS-14"	-	1K2	1K2	1K0
AP 80010 00 Stereo-2x1.2W RMS-14"	X	2K2	2K2	10K0

TUNER CTT5000

(FREQUENCY SYNTHESIS - SYNTHESE DE FREQUENCE - FREQUENZSYNTHESE - SINTESI DI FREQUENZA - SINTESIS DE FRECUENCIA)

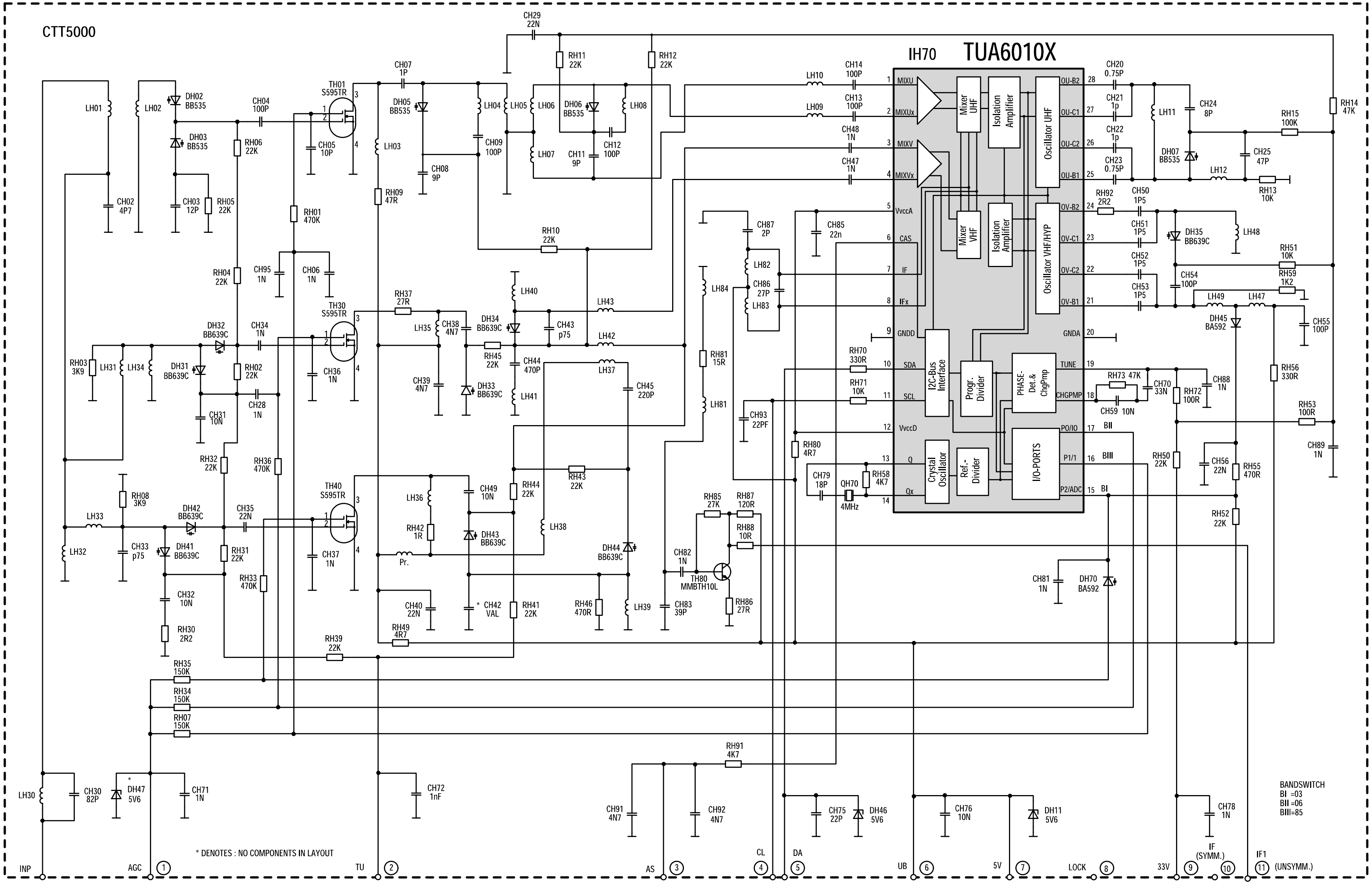

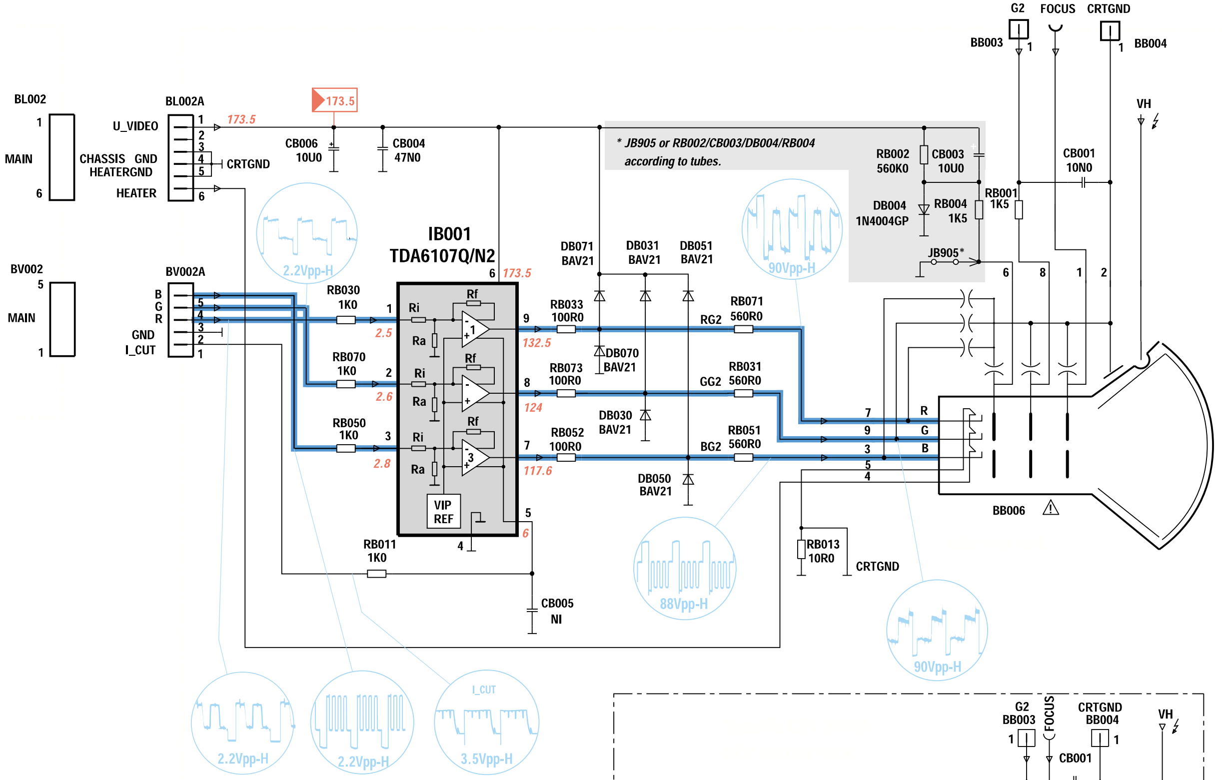

Safety Part
When repairing, use original part only
Piece de securite
N'utilisez que les pieces d'origine
Sicherheitsbauteil
Bei Ersatz nur Originalteil verwenden

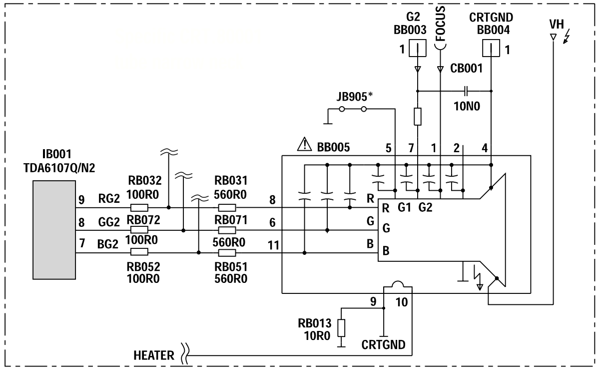

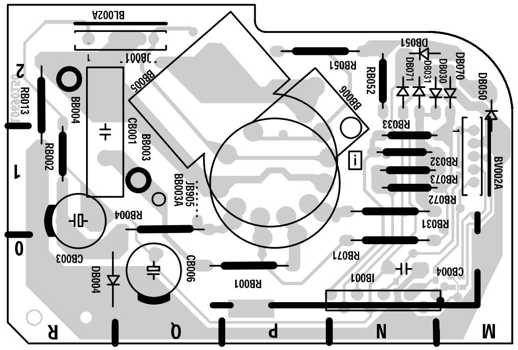

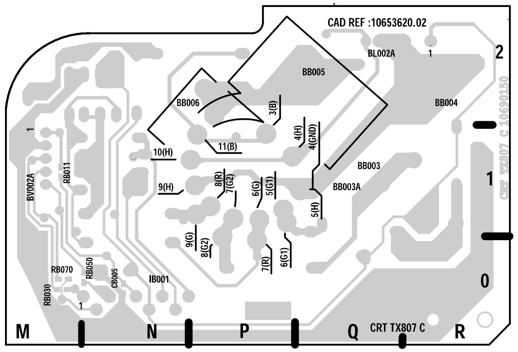

FRONT CONNECTOR BOARD -
PRISES EN FACADE ET INTERCONNEXION DU CLAVIER -
FRONT ANSCHLUSSPLATTE - PIASTRA CONNESSIONE FRONTALE -
PLÁTINA MANDOS FRONTAL

FCB.80001.00

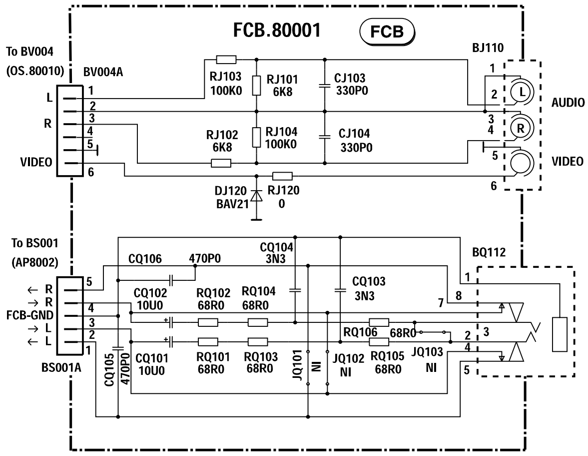

KDB.80001.00

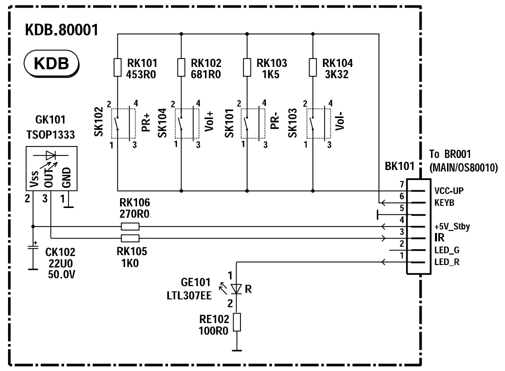

FCB.80001.00

KDB.80001.00

COMPONENT SIDE - COTE COMPOSANTS - BESTÜCKUNGSSEITE - LATO COMPONENTI - LADO COMPONENTES

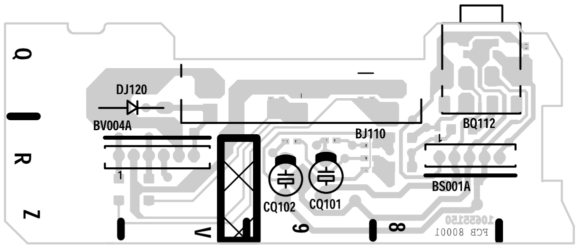

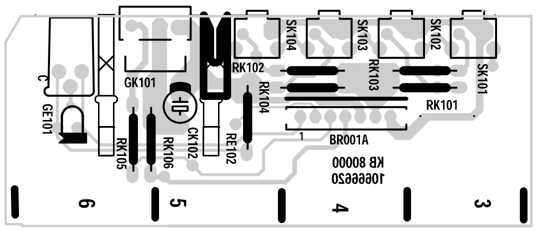

SOLDER SIDE - CÔTE SOUDURES - LÖTSEITE - LATO SALDATURE - LADO SOLDADURAS

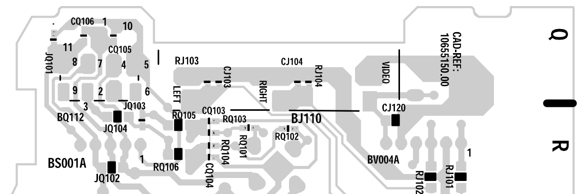

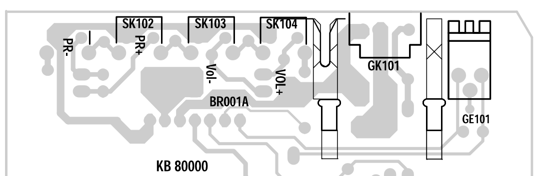

KEYBOARD MODULE - PLATINE CLAVIER - TASTATURPLATTE - PISATRA COMANDI - PLATINA TECLADO

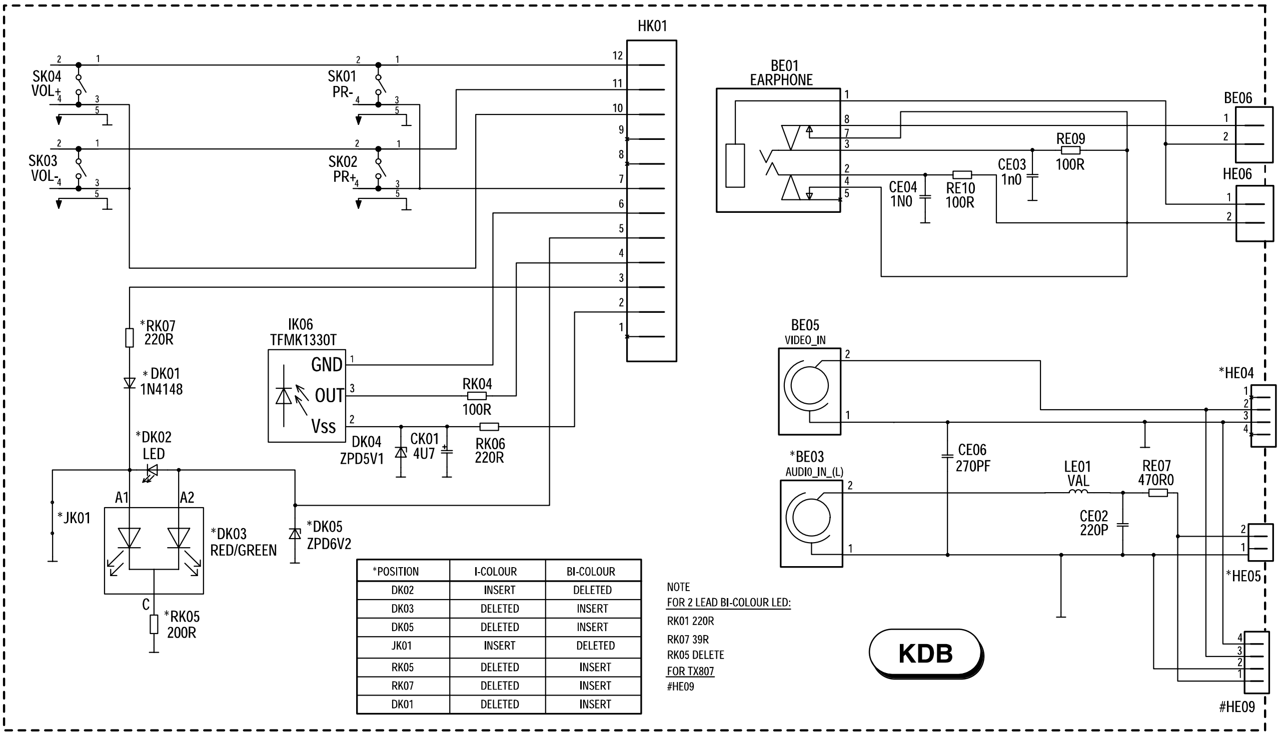

*POSITION	I-COLOUR	BI-COLOUR
DK02	INSERT	DELETED
DK03	DELETED	INSERT
DK05	DELETED	INSERT
JK01	INSERT	DELETED
RK05	DELETED	INSERT
RK07	DELETED	INSERT
DK01	DELETED	INSERT

NOTE
FOR 2 LEAD BI-COLOUR LED:
RK01 220R
RK07 39R
RK05 DELETE
FOR TX807
#HE09

SUB SATELLITE MODULE - SOUS MODULE SATELLITE - SUBMODUL SATELLIT
MODULO SATELLITE - MÓDULO SATELLITE

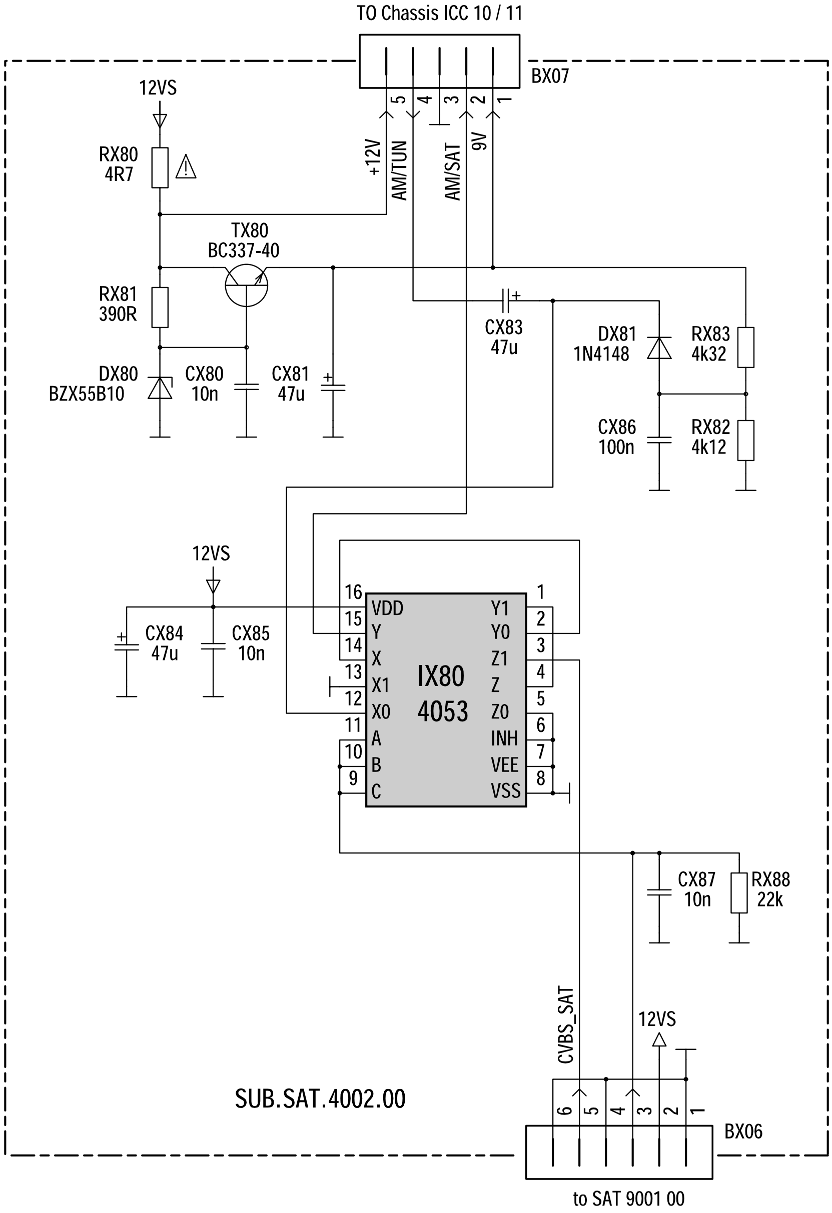

SUB SATELLITE MODULE - SOUS MODULE SATELLITE - SUBMODUL SATELLIT
MODULO SATELLITE - MÓDULO SATÉLITE

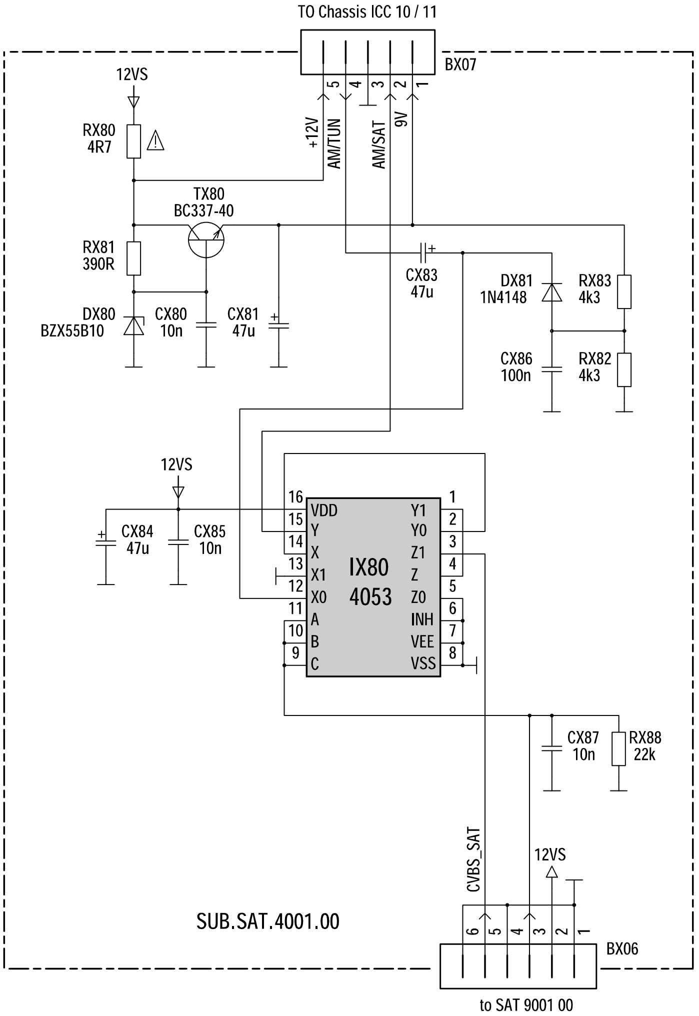

COMPONENT SIDE - COTE ELEMENTS
BESTÜCKUNGSSEITE
LATO COMPONENTI - LADO COMPONENTES

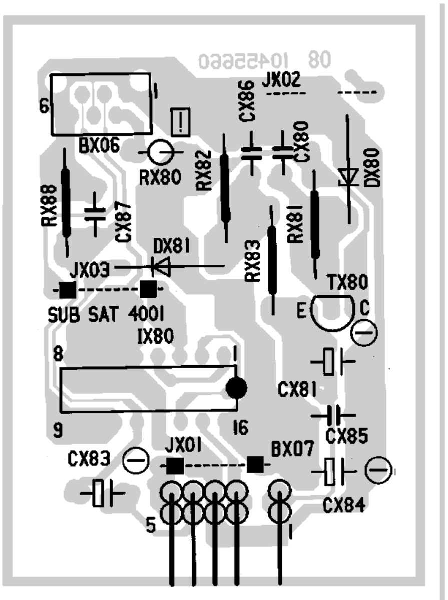

SOLDER SIDE - COTE CUIVRE
LÖTSEITE
LATO SALDATURE - LADO DEL COBRE

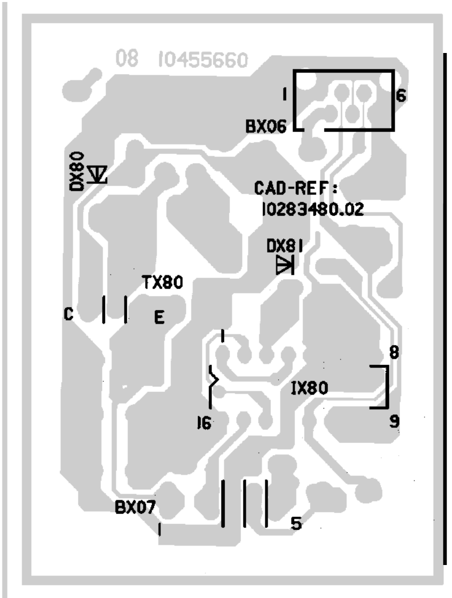

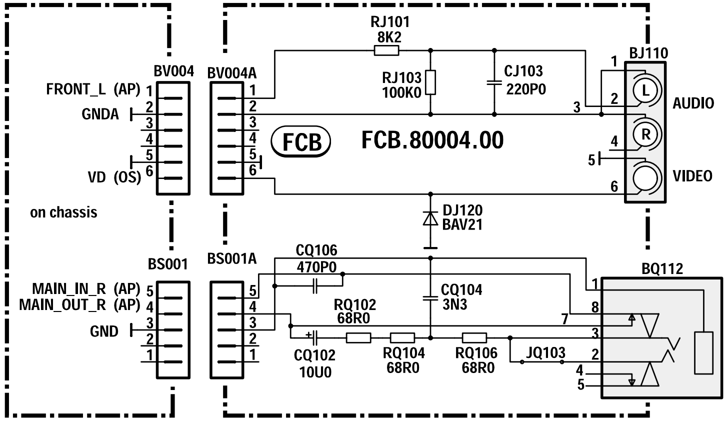

FCB
FCB.80004.00
BV004
BV004A
FRONT_L (AP)
GNDA
VD (OS)
on chassis
RJ101
8K2
RJ103
100K0
CJ103
220P0
BJ110
AUDIO
VIDEO
DJ120
BAV21
BS001
BS001A
MAIN_IN_R (AP)
MAIN_OUT_R (AP)
GND
CQ106
470P0
RQ102
68R0
CQ104
3N3
BQ112
CQ102
10U0
RQ104
68R0
RQ106
68R0
JQ103

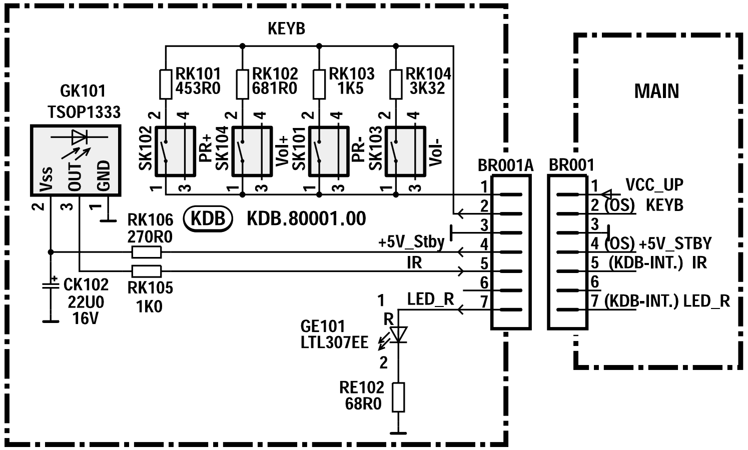

KEYB
KDB
KDB.80001.00
MAIN
GK101
TSOP1333
Vss
OUT
GND
RK101
453R0
RK102
681R0
RK103
1K5
RK104
3K32
SK102
PR+
SK104
Vol+
SK101
PR-
SK103
Vol-
BR001A
BR001
1 VCC_UP
2 (OS) KEYB
3
4 (OS) +5V_STBY
5 (KDB-INT.) IR
6
7 (KDB-INT.) LED_R
RK106
270R0
RK105
1K0
CK102
22U0
16V
+5V_Stby
IR
LED_R
GE101
LTL307EE
RE102
68R0

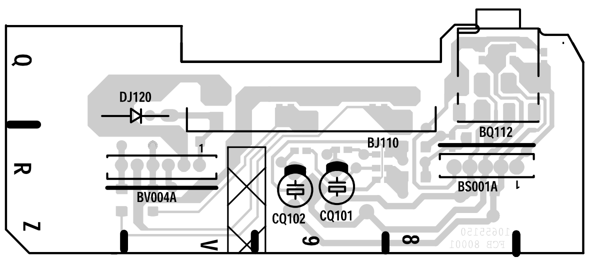

DJ120
BJ110
BQ112
BV004A
BS001A
CQ102
CQ101

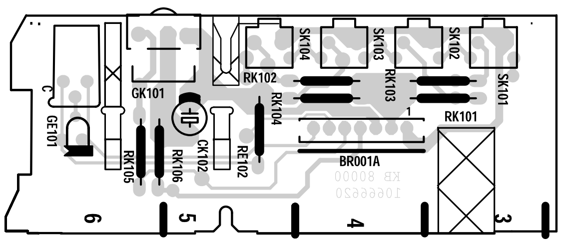

SK104
SK103
SK102
SK101
RK102
RK103
RK104
GK101
GE101
CK102
RE102
RK105
RK106
RK101
BR001A

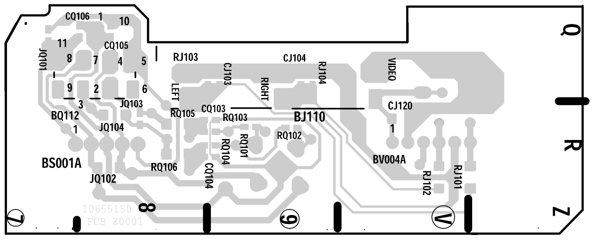

CQ106
CQ105
RJ103
CJ104
BJ110
CJ120
BQ112
JQ103
JQ104
BS001A
JQ102
RQ106
CQ104
BV004A
RJ101
RJ102
VIDEO

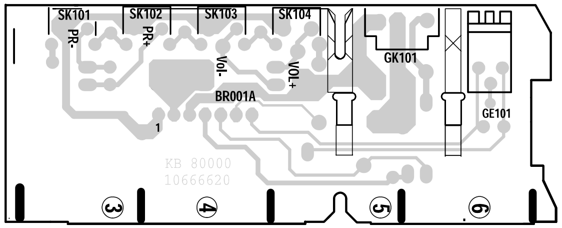

SK101
SK102
SK103
SK104
GK101
BR001A
GE101

FRONT CONNECTOR BOARD - PRISES EN FACADE ET INTERCONNEXION DU CLAVIER - FRONT ANSCHLUSSPLATTE - PIASTRA CONNESSIONE FRONTALE - PLÁTINA MANDOS FRONTAL

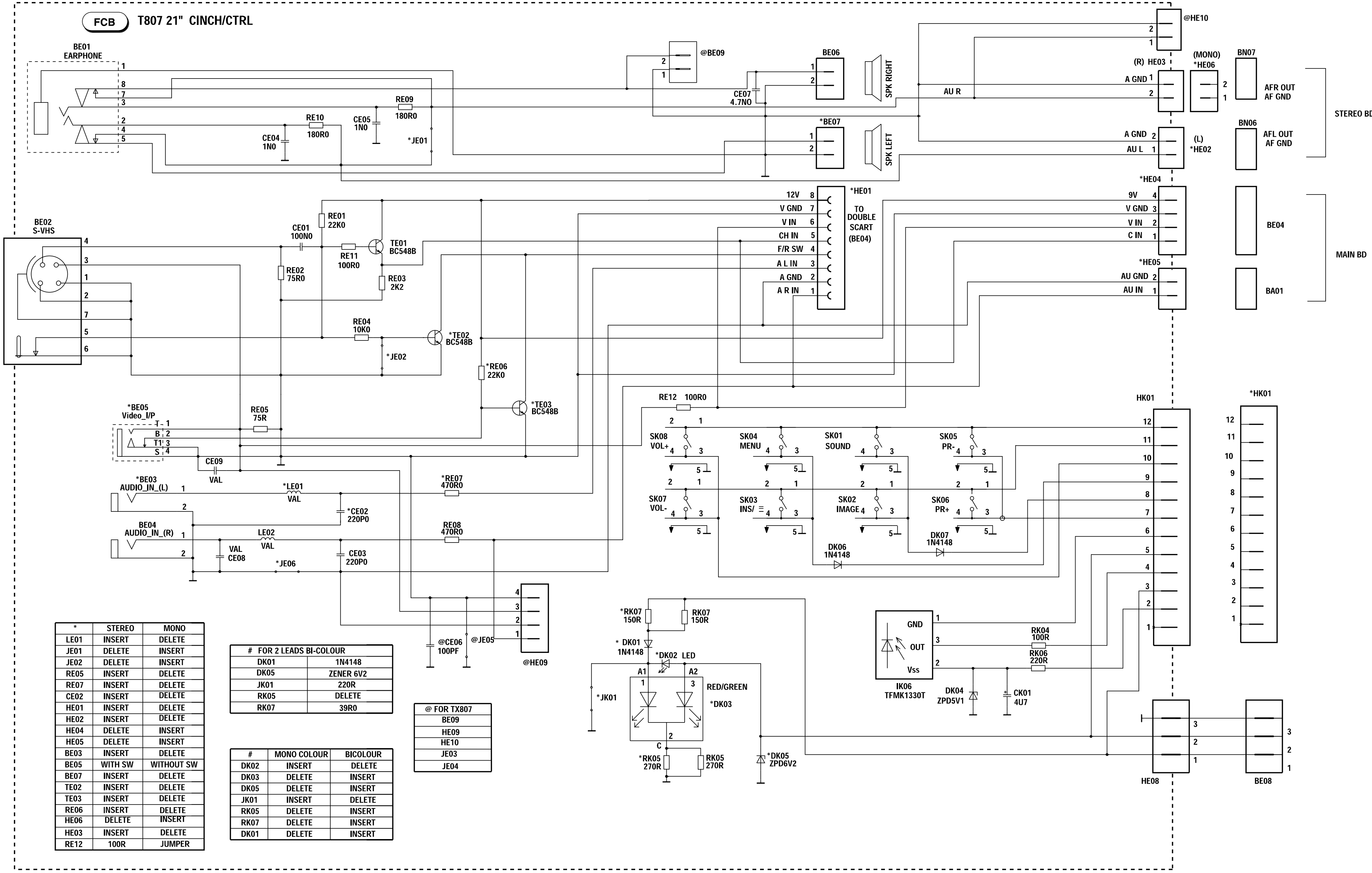

*	STEREO	MONO
LE01	INSERT	DELETE
JE01	DELETE	INSERT
JE02	DELETE	INSERT
RE05	INSERT	DELETE
RE07	INSERT	DELETE
CE02	INSERT	DELETE
HE01	INSERT	DELETE
HE02	INSERT	DELETE
HE04	DELETE	INSERT
HE05	DELETE	INSERT
BE03	INSERT	DELETE
BE05	WITH SW	WITHOUT SW
BE07	INSERT	DELETE
TE02	INSERT	DELETE
TE03	INSERT	DELETE
RE06	INSERT	DELETE
HE06	DELETE	INSERT
HE03	INSERT	DELETE
RE12	100R	JUMPER

# FOR 2 LEADS BI-COLOUR	
DK01	1N4148
DK05	ZENER 6V2
JK01	220R
RK05	DELETE
RK07	39R0

#	MONO COLOUR	BICOLOUR
DK02	INSERT	DELETE
DK03	DELETE	INSERT
DK05	DELETE	INSERT
JK01	INSERT	DELETE
RK05	DELETE	INSERT
RK07	DELETE	INSERT
DK01	DELETE	INSERT

@ FOR TX807
BE09
HE09
HE10
JE03
JE04

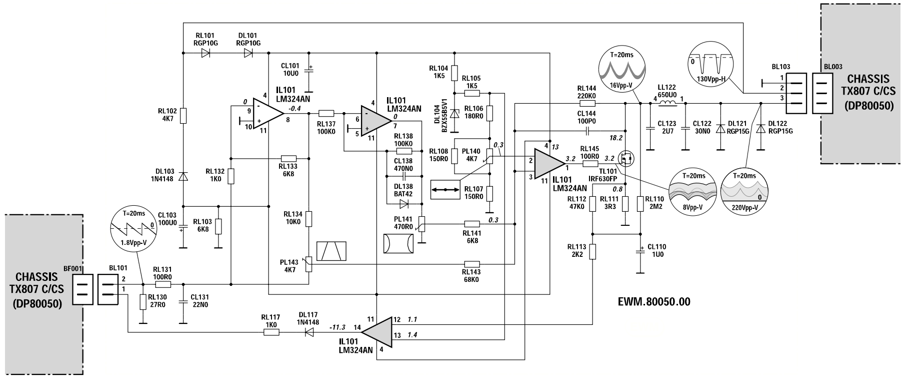
CHASSIS
TX807 C/CS
(DP80050)
CHASSIS
TX807 C/CS
(DP80050)
EWM.80050.00

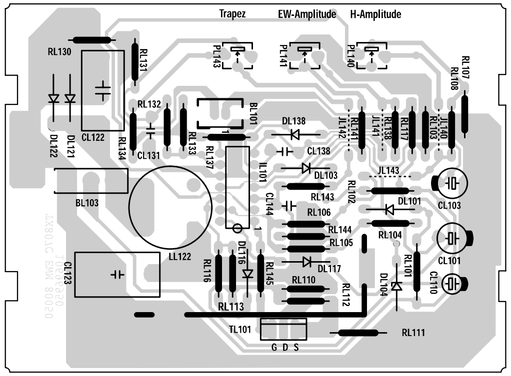
Trapez
EW-Amplitude
H-Amplitude

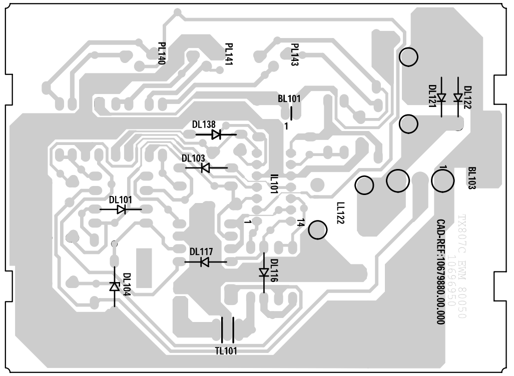
CAD-REF:10679880.00.000

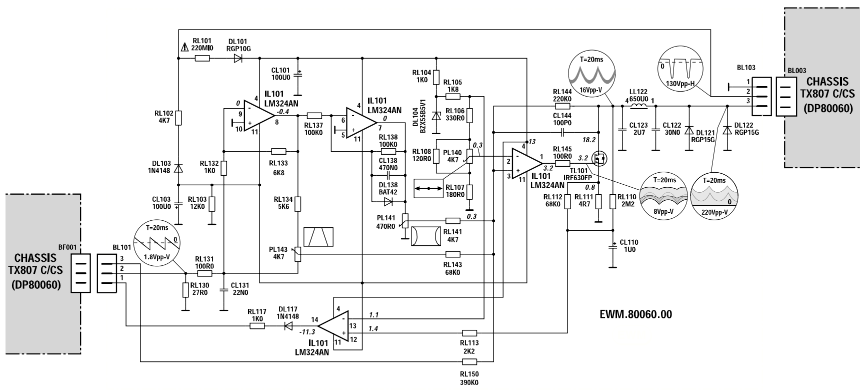
CHASSIS
TX807 C/CS
(DP80060)
CHASSIS
TX807 C/CS
(DP80060)
EWM.80060.00

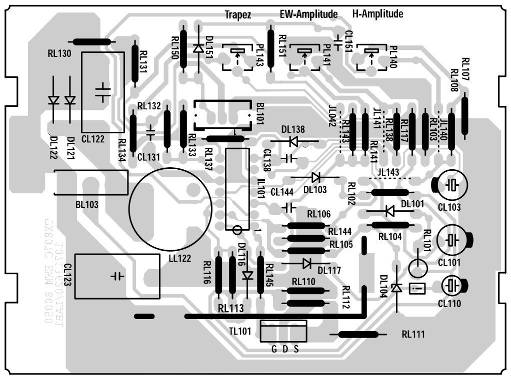
Trapez
EW-Amplitude
H-Amplitude

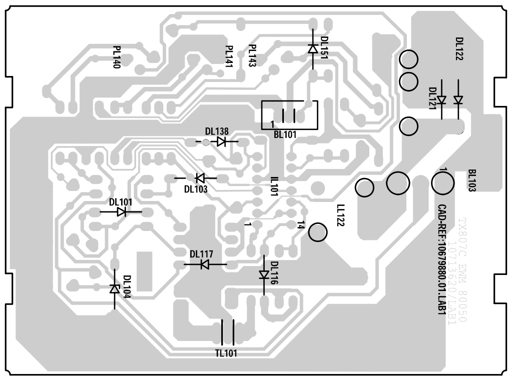
CAD-REF:10679880.01.LAB1

SUB SATELLITE MODULE - SOUS MODULE SATELLITE - SUBMODUL SATELLIT
MODULO SATELLITE - MÓDULO SATELLITE

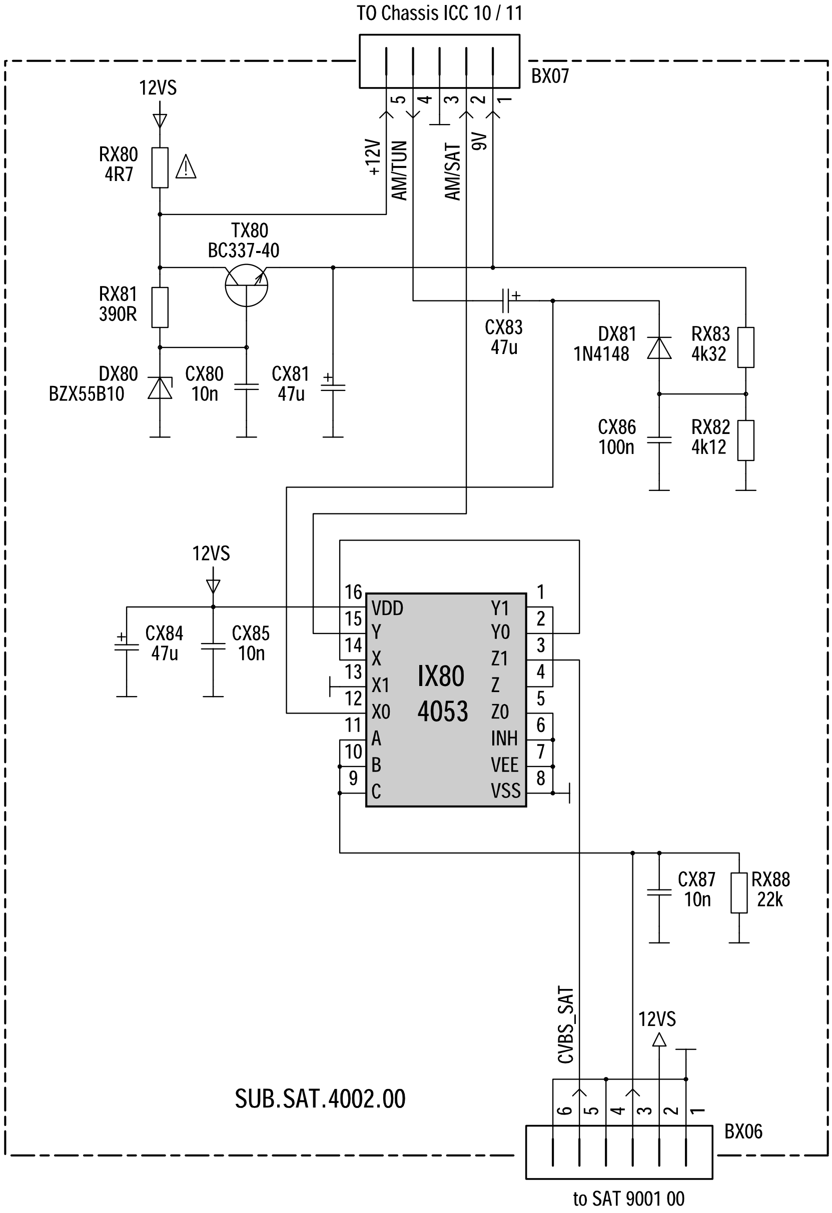

SUB SATELLITE MODULE - SOUS MODULE SATELLITE - SUBMODUL SATELLIT
MODULO SATELLITE - MÓDULO SATÉLITE

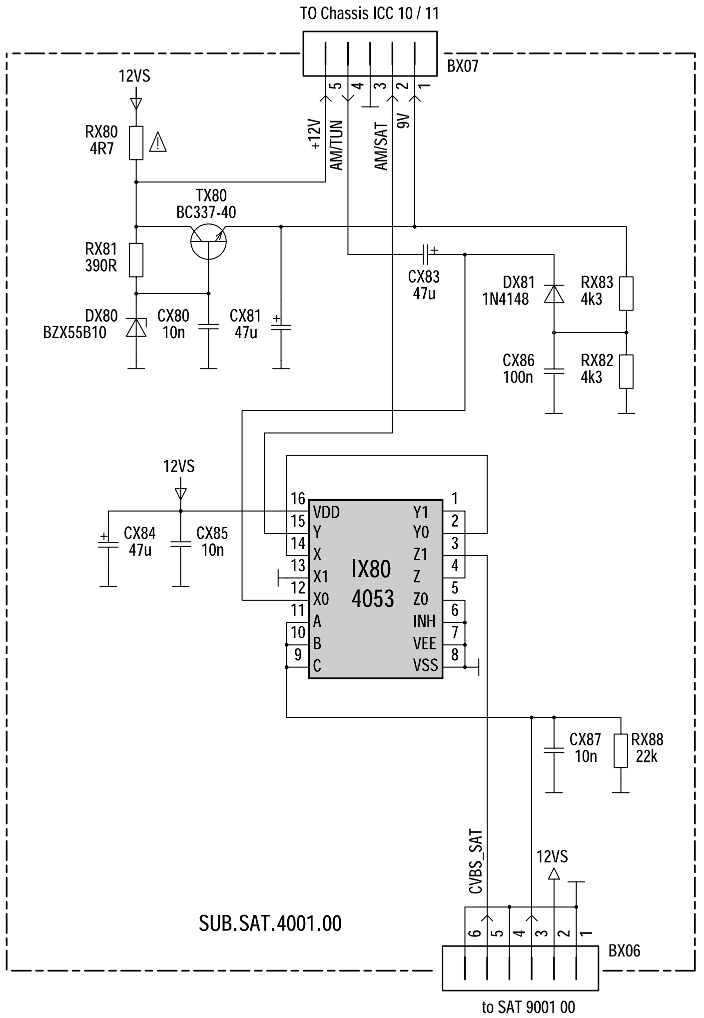

COMPONENT SIDE - COTE ELEMENTS
BESTÜCKUNGSSEITE
LATO COMPONENTI - LADO COMPONENTES

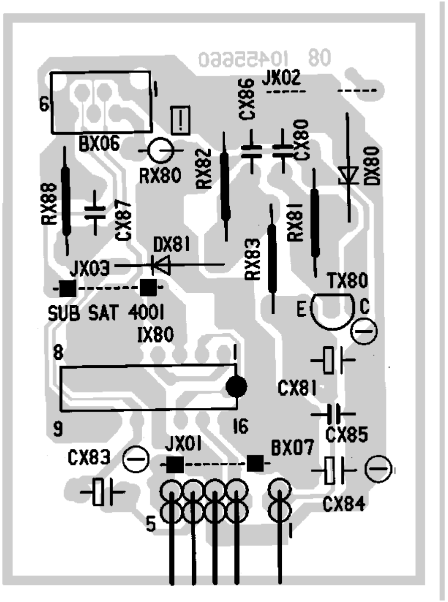

SOLDER SIDE - COTE CUIVRE
LÖTSEITE
LATO SALDATURE - LADO DEL COBRE

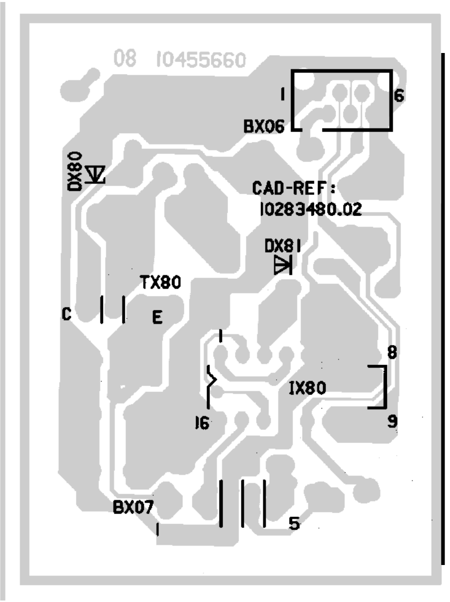

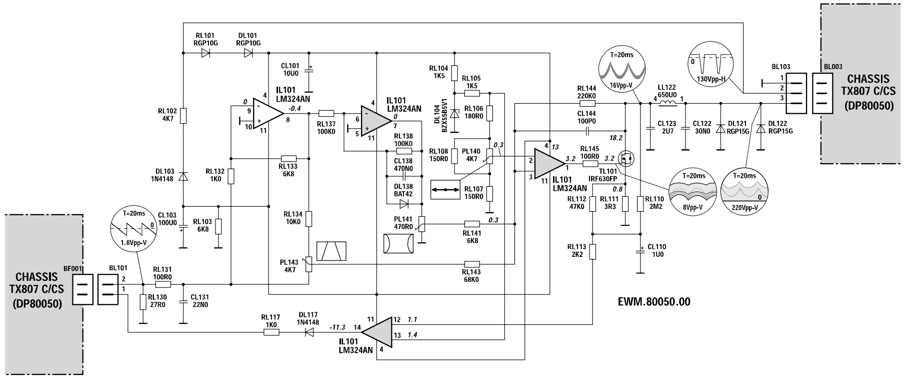

EWM.80050.00

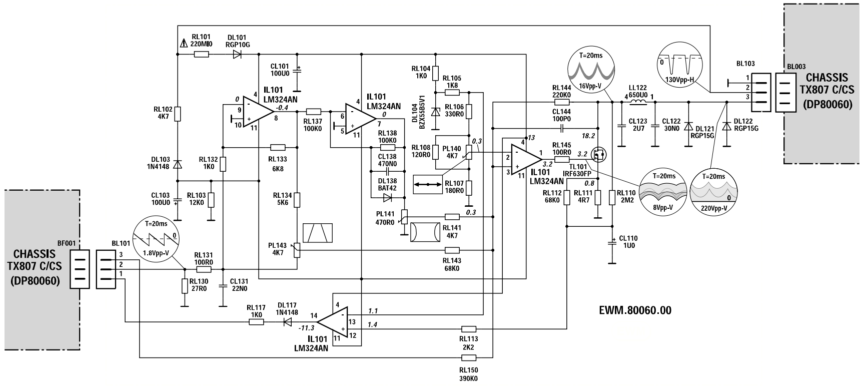

EWM.80060.00

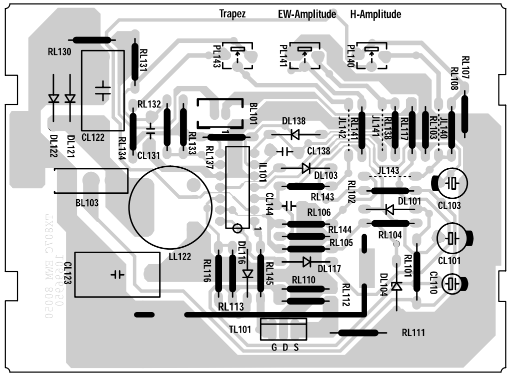

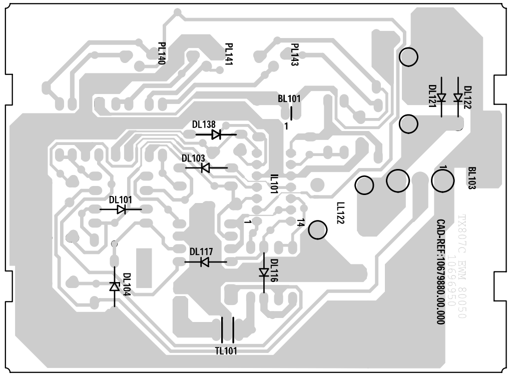

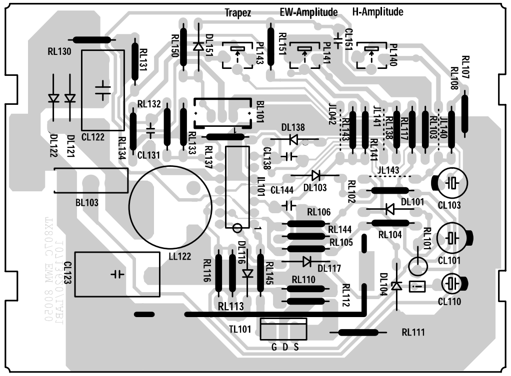

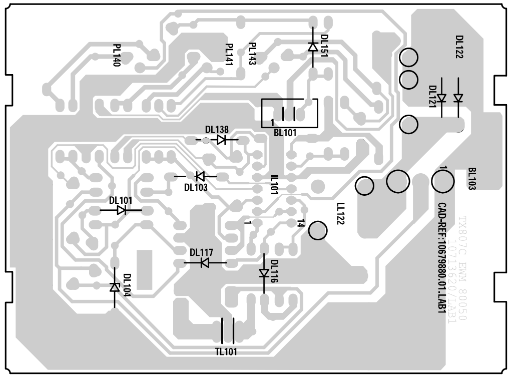

SUB SATELLITE MODULE - SOUS MODULE SATELLITE - SUBMODUL SATELLIT
MODULO SATELLITE - MÓDULO SATELLITE

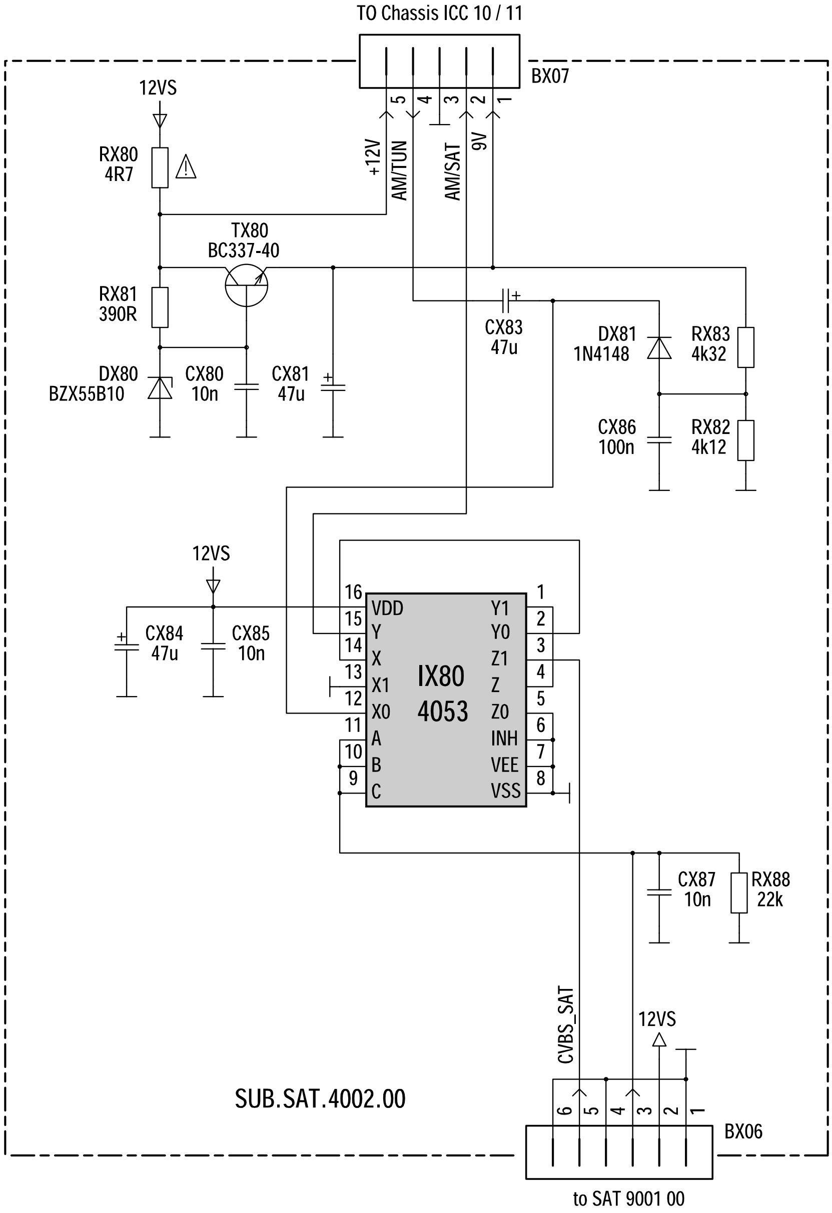

SUB SATELLITE MODULE - SOUS MODULE SATELLITE - SUBMODUL SATELLIT
MODULO SATELLITE - MÓDULO SATÉLITE

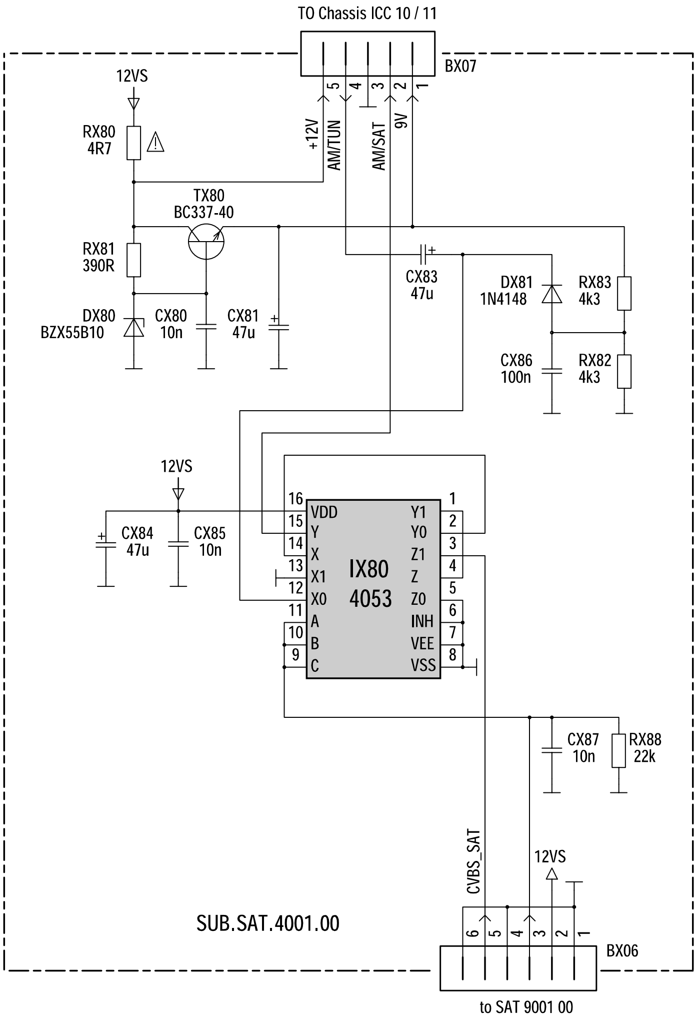

COMPONENT SIDE - COTE ELEMENTS
BESTÜCKUNGSSEITE
LATO COMPONENTI - LADO COMPONENTES

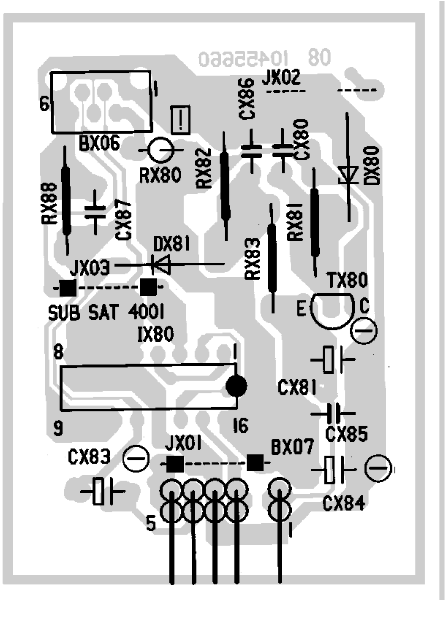

SOLDER SIDE - COTE CUIVRE
LÖTSEITE
LATO SALDATURE - LADO DEL COBRE

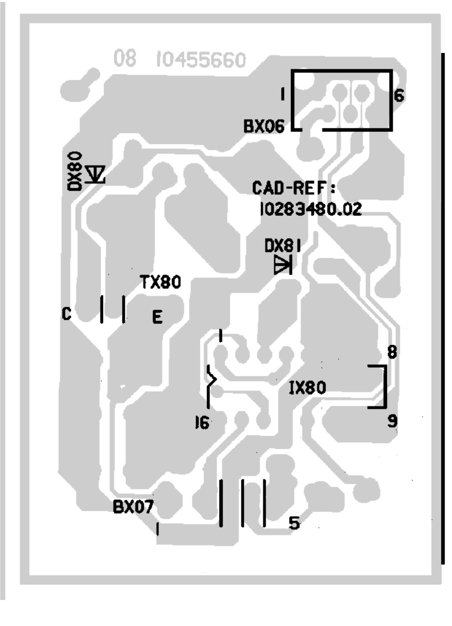

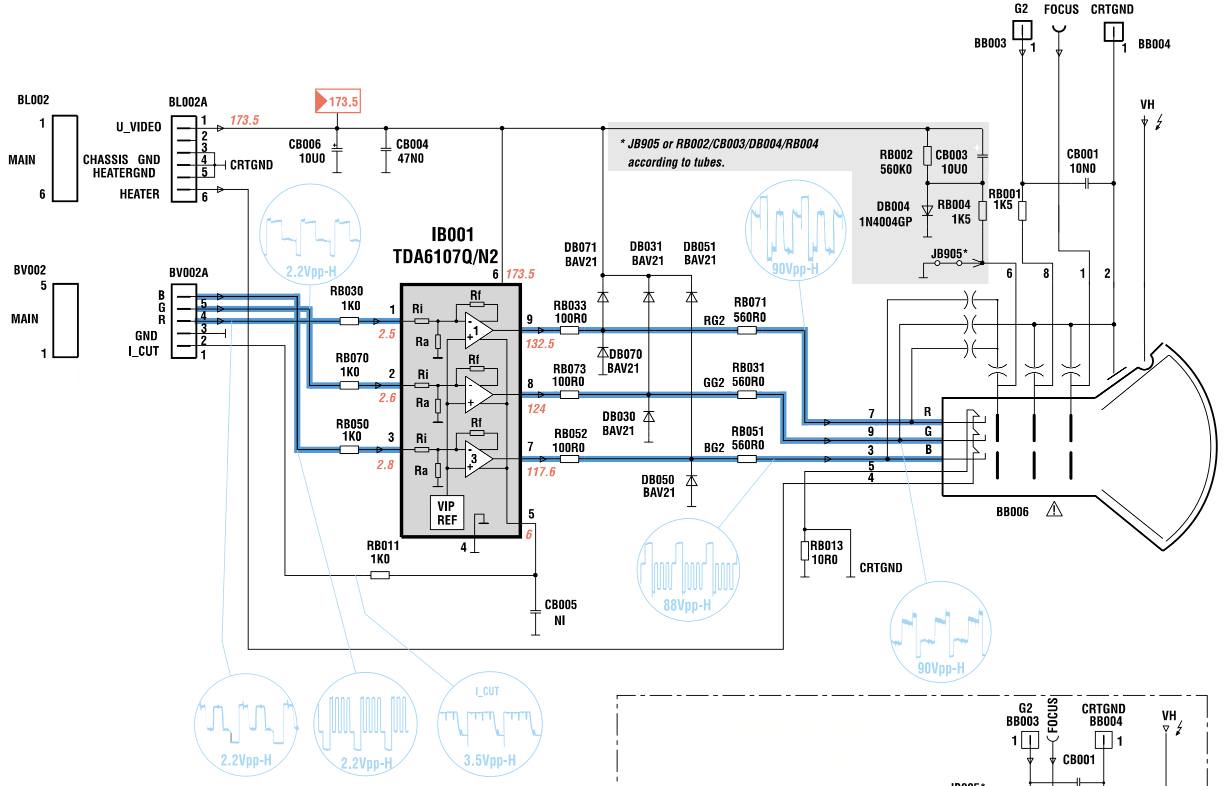

Safety Part
When repairing, use original part only
Piece de securite
N'utilisez que les pieces d'origine
Sicherheitsbauteil
Bei Ersatz nur Originalteil verwenden

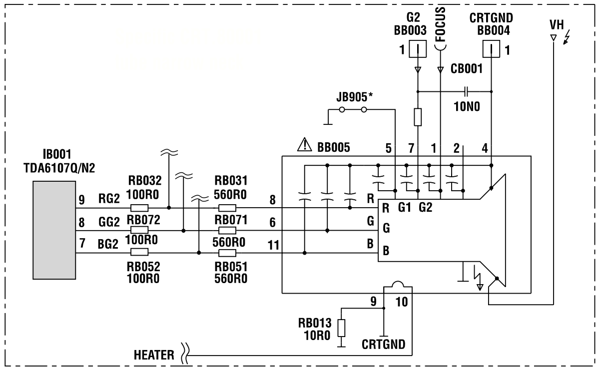

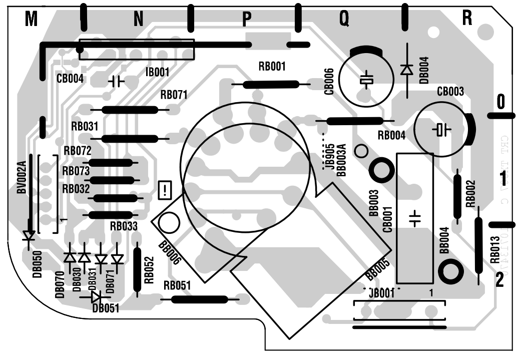

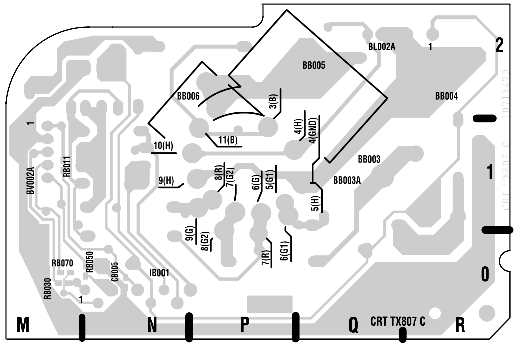

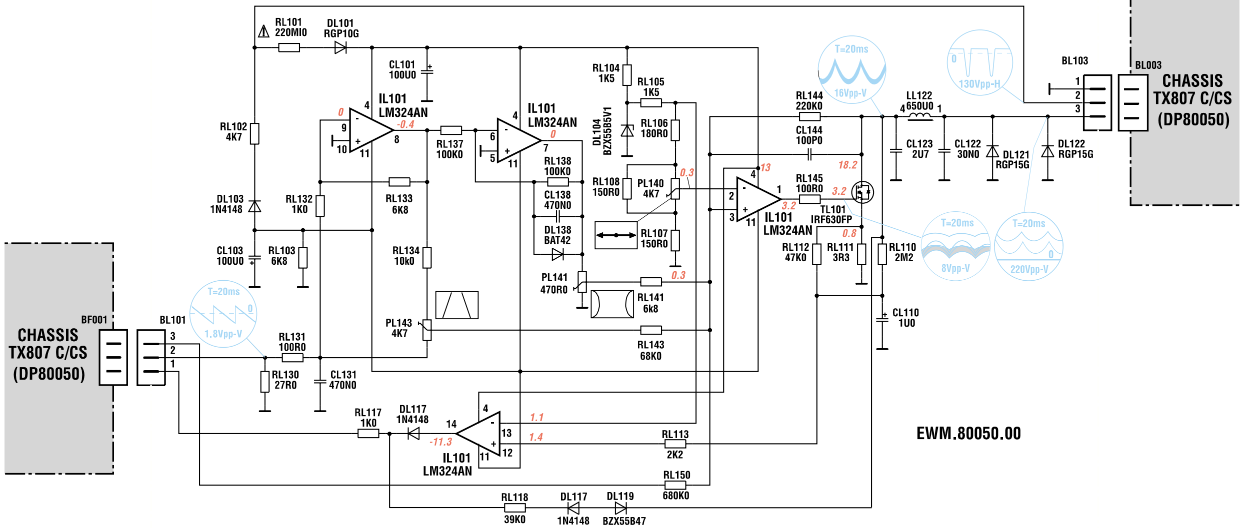

EWM.80050.00

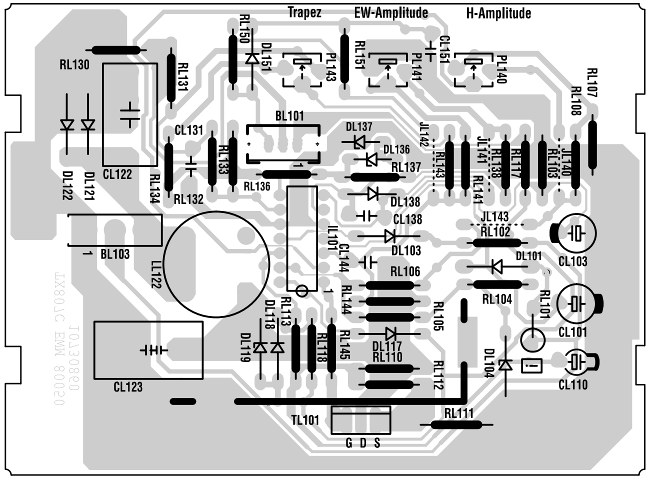

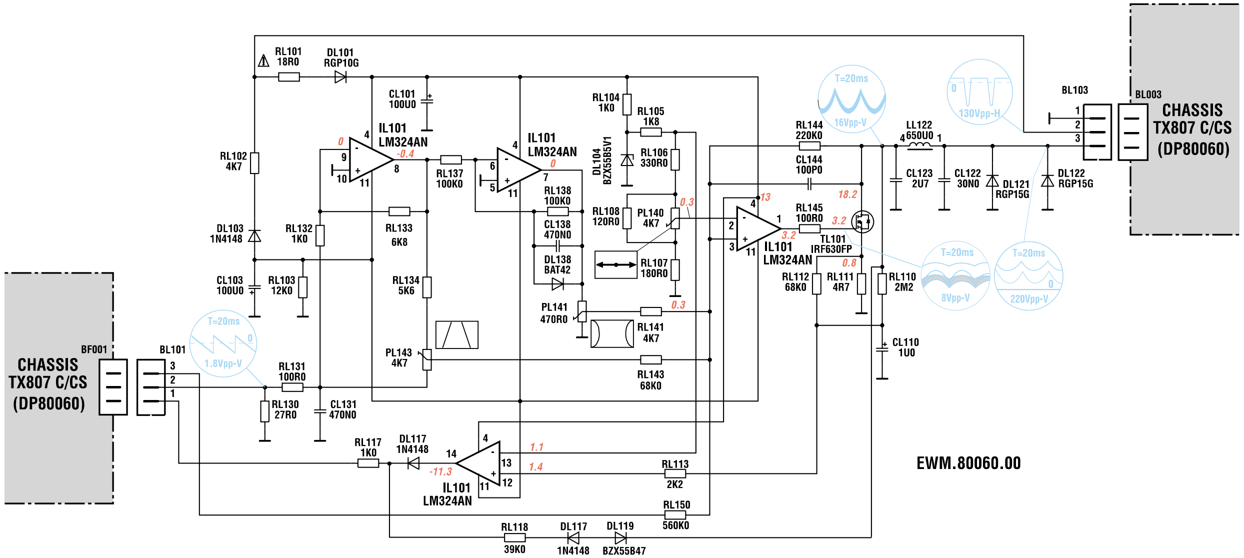

EWM.80060.00

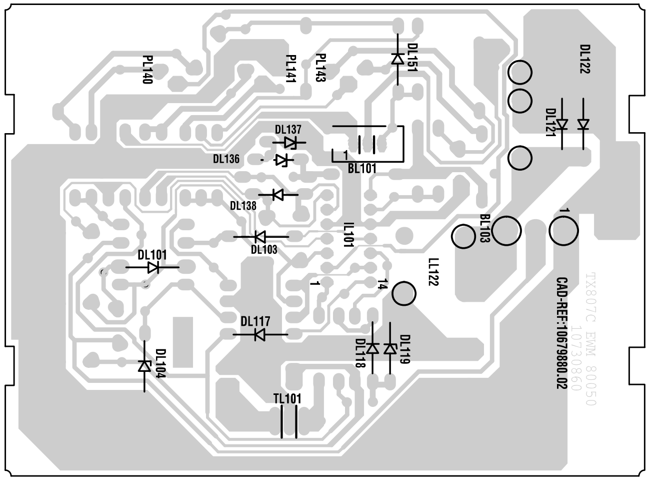

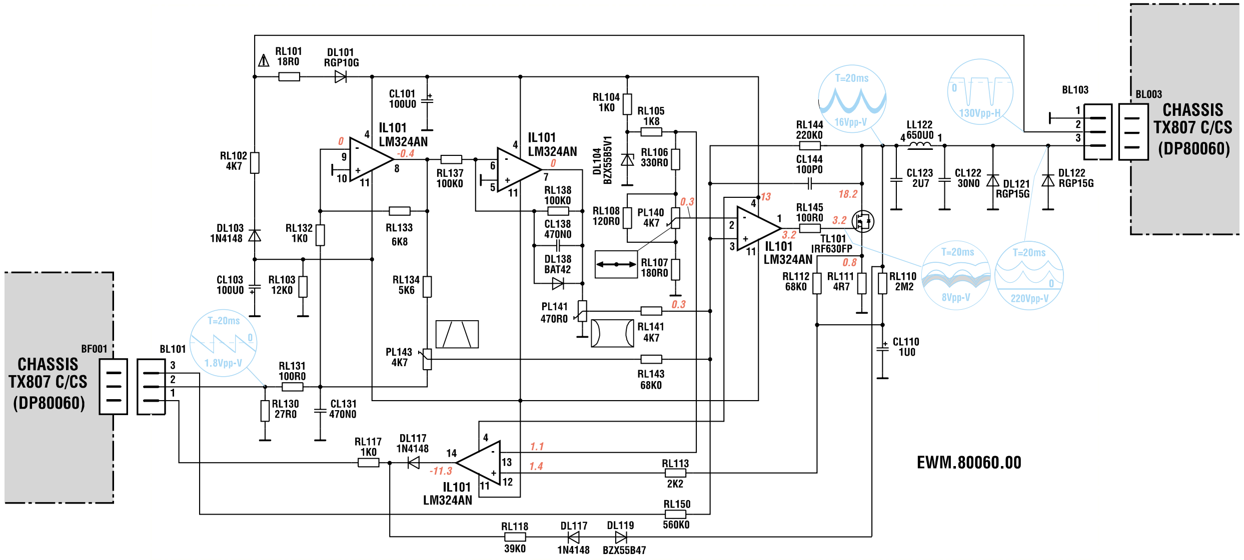

EWM.80060.00

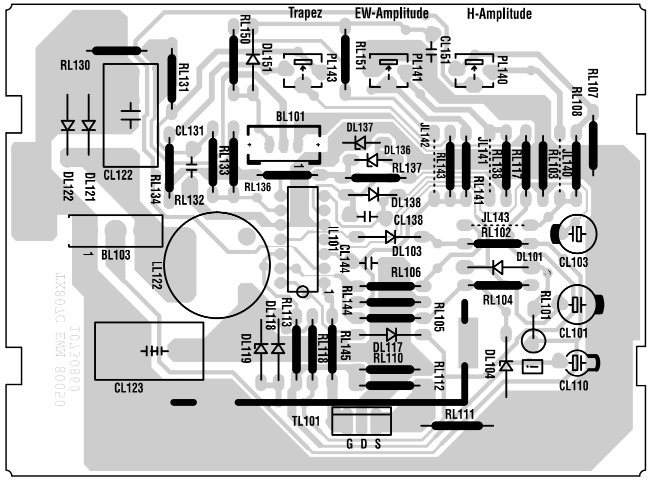

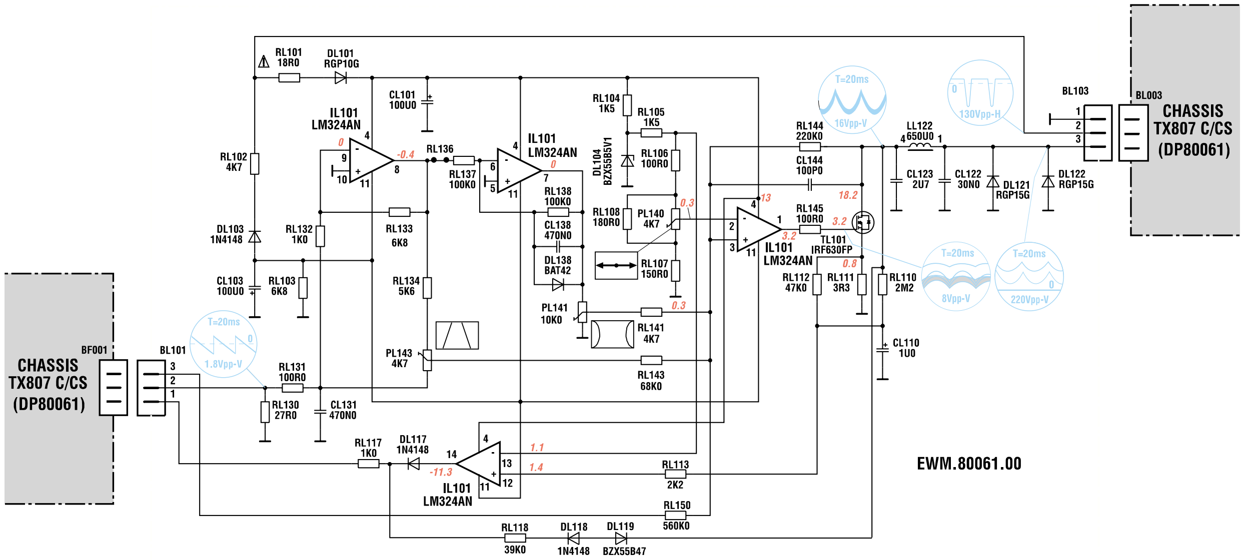

EWM.80061.00

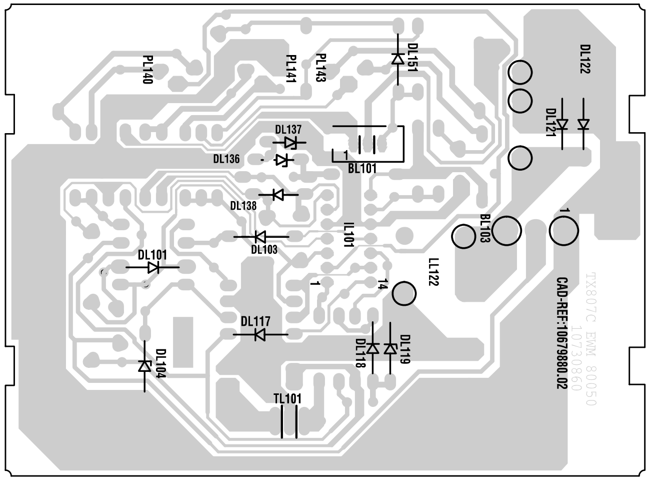

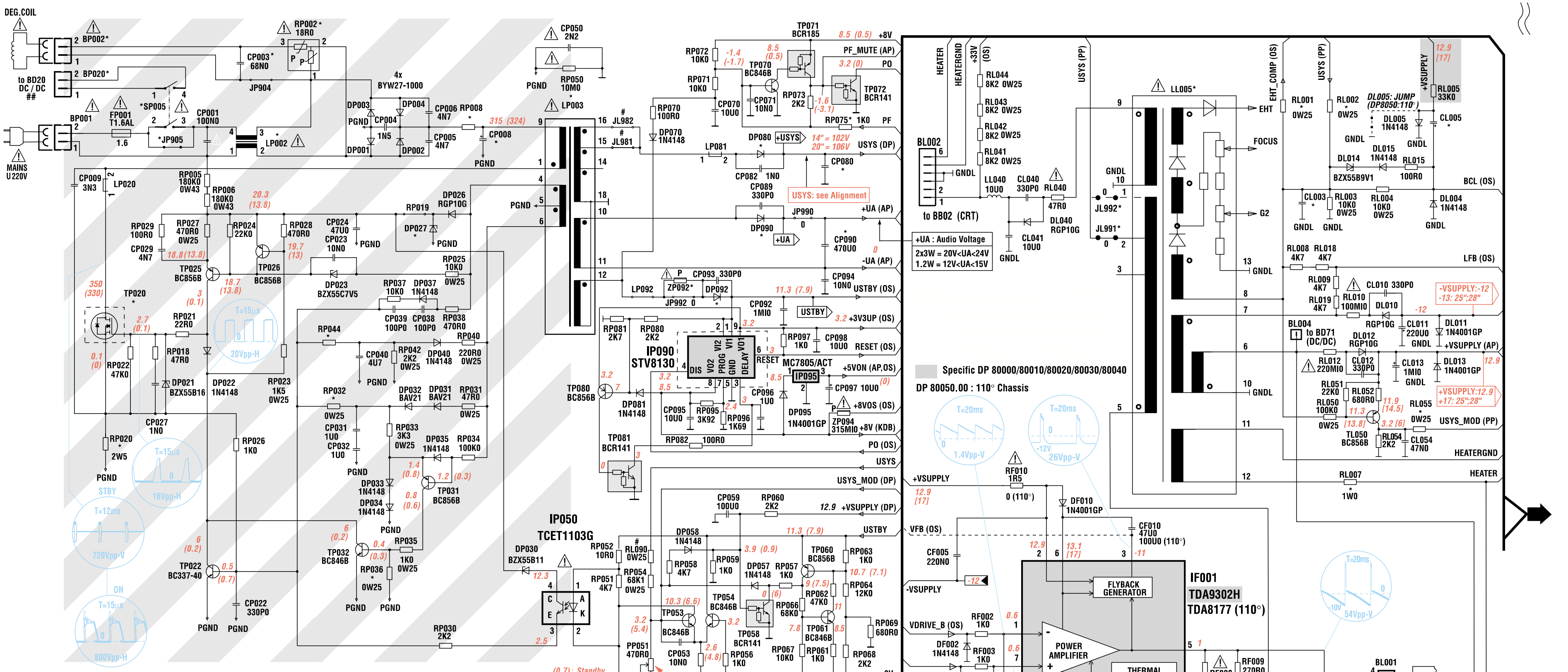

(0.7) : Standby

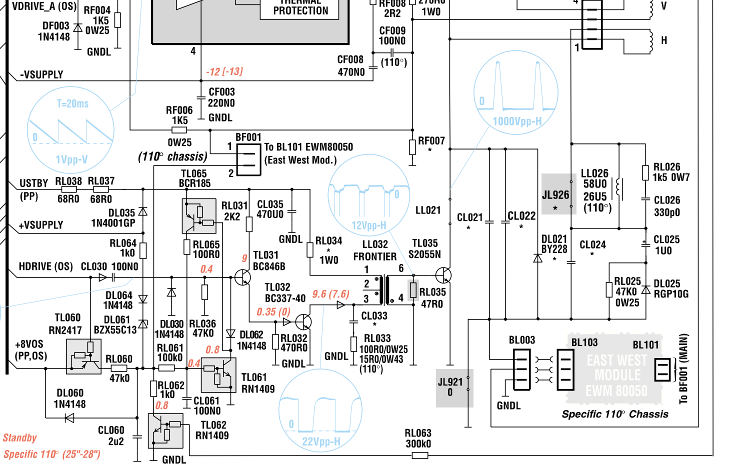

= value see DP 8... partlists
: only some models

(0.7) : Standby
[17] : Specific 110° (25"-28")

*	PP 80000 PP 80002	PP 80001	PP 80003	PP 80005	PP 80007
BP002	X	X	X	X	-
BP20/99	-	-	-	-	X
CP003	X	X	X	X	-
CP008	68U0	100U0	100U0	150U0	68U0
CP080	100U0	100U0	100U0	220U0	100U0
CP090	16.0V	25.0V	25.0V	25.0V	16.0V
DP027	BZX55B27	BZX55B27	BZX55B27	BZX55B30	BZX55B27
DP080	MUR160	MUR160	MUR160	MUR460	MUR160
DP090	RGP10G	MUR120	MUR120	RGP10G	RGP10G
DP092	MUR120	MUR120	MUR120	EGP10D	EGP10D
JP905	-	-	X	X	-
JP992	X	-	-	-	X
LP002	60M0	60M0	60M0	25M0	12M0
LP003	10658360	10656090	10656090	10693580	10658630
RP002	X	X	X	X	-
RP008	5R1/2.5W	5R1/2.5W	5R1/2.5W	4R7/3W	5R1/2.5W
RP020	1R0	1R0	1R0	680MI0	1R0
RP032	33K0	33K0	33K0	27K0	33K0
RP036	2K2	2K2	2K2	1K8	2K2
RP044	12K0	10K0	10K0	7K5	12K0
RP075	X	-	-	-	X
SP005	X	-	-	X	X
TP020	STP3NB90FP	STP3NB90FP	STP3NB90FP	STP3NB90FP	STP3NB90FP
ZP092	-	MP315	MP315	MP315	-

X : Inserted **-** : Not inserted

* Models without SP005

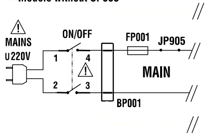

⚠

Use isolating mains transformer
Utilise un transformateur isolateur du secteur
Einen Trenntrafo verwenden
Utilizar un transformador aislador de red
Utilizzare un transformatore per isolarvi dalla rete

Part of board connected to mains supply.
Partie du chassis reliée au secteur.
Primärseite des Netzteils.
Parte dello châssis collegata alla rete.
Parte del chasis conectada a la red.

*	CL003	CL005	CL021	CL022	CL024	CL033	DL021	LL005	RF007	RF010	RL001	RL002	RL007	RL034	RL055	JL926	JL991	JL992
DP 80000 90° 4/3 10" Mini Neck	10N	4U7	6N6	330P	390N0	22N0	-	10658460	1R82	1R5	82K0	120K0	2R2 0.43W	47R0 1W0	68K0	X	-	X
DP 80010 90° 4/3 14" Mini Neck	10N	4U7	6N6	330P	440N0	22N0	-	10658340	1R82	1R5	82K0	100K0	2R2 1W0	39R0 1W0	68K0	X	-	X
DP 80020 90° 4/3 17" Mini Neck	10N	4U7	7N6	-	330N0	22N0	-	10658470	1R5	1R5	82K0	91K0	2R2 0.43W	33R0 1W0	68K0	X	X	-
DP 80030 90° 4/3 20" Narrow Neck	10N	4U7	7N6	-	440N0	22N0	-	10658470	1R5	1R5	82K0	82K0	1R0 1W0	33R0 1W0	68K0	X	-	X
DP 80040 90° 4/3 21" Narrow Neck	10N	4U7	8N3	-	440N0	22N0	-	10654690	1R21	1R5	91K0	91K0	1R0 1W0	27R0 1W0	68K0	-	-	X
DP 80050 110° 4/3 25" - 21"Narrow Neck	22N	2U2	14N6	-	440N0	100N0	X	10654690	1R21	0	220K0	91K0	1R0 1W0	10R0 0W43	220K0	-	-	X

Note :
Power Supply primary circuit measurements.
- Use only (**PGND**) connection point.

Attention :
Mesure dans la partie primaire de l'alimentation
- Utiliser la masse du bloc alimentation (**PGND**).

Achtung :
Bei Messungen im Primärnetzteil
- Primärnetzteilmasse verwenden (**PGND**).

Attenzione :
misure nell'alimentatore primario
- usare massa alimentazione primario (**PGND**).

Cuidado :
Medida en el bloque de alimentacion
- Utilizar la masa del bloque de alimentacion (**PGND**).

⚠ Indicates critical safety components, and identical components should be used for replacement. Only then can the operational safety be garanteed.

Le remplacement des éléments de sécurité (repérés avec le symbole ⚠ par des composants non homologués selon la Norme CEI 65 entraine la non-conformité de l'appareil. Dans ce cas, la responsabilité du fabricant n'est plus engagée.

Wenn Sicherheitsteile (mit dem Symbol ⚠ gekennzeichnet) durch nicht normgerechte Teile ersetzt werden, erlischt die Haftung des Herstellers.

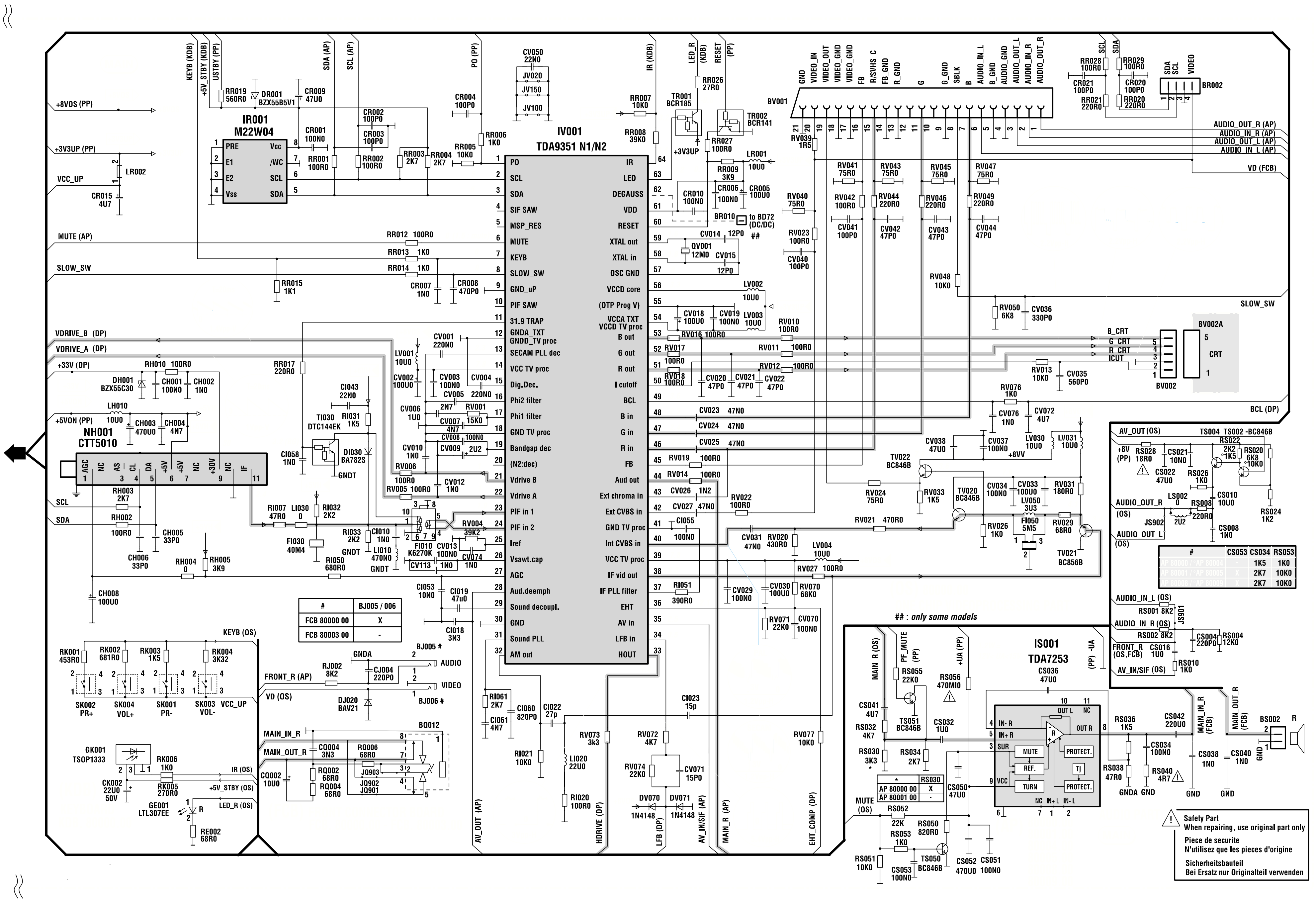

#	BJ005 / 006
FCB 80000 00	X
FCB 80003 00	-

#		CS053	CS034	RS053
AP 80000 / AP 80004	-	1K5		1K0
AP 80001 / AP 80005	X	2K7		10K0
AP 80002 / AP 80006	X	2K7		10K0

*	RS030
AP 80000 00	X
AP 80001 00	-

MAIN BOARD - PLATINE PRINCIPALE - CHASSIS GRUNDPLATTE - PIASTRA PRINCIPALE - PLATINA PRINCIPAL

COMPONENT SIDE -
COTE COMPOSANTS -
BESTÜCKUNGSSEITE -
LATO COMPONENTI -
LADO COMPONENTES

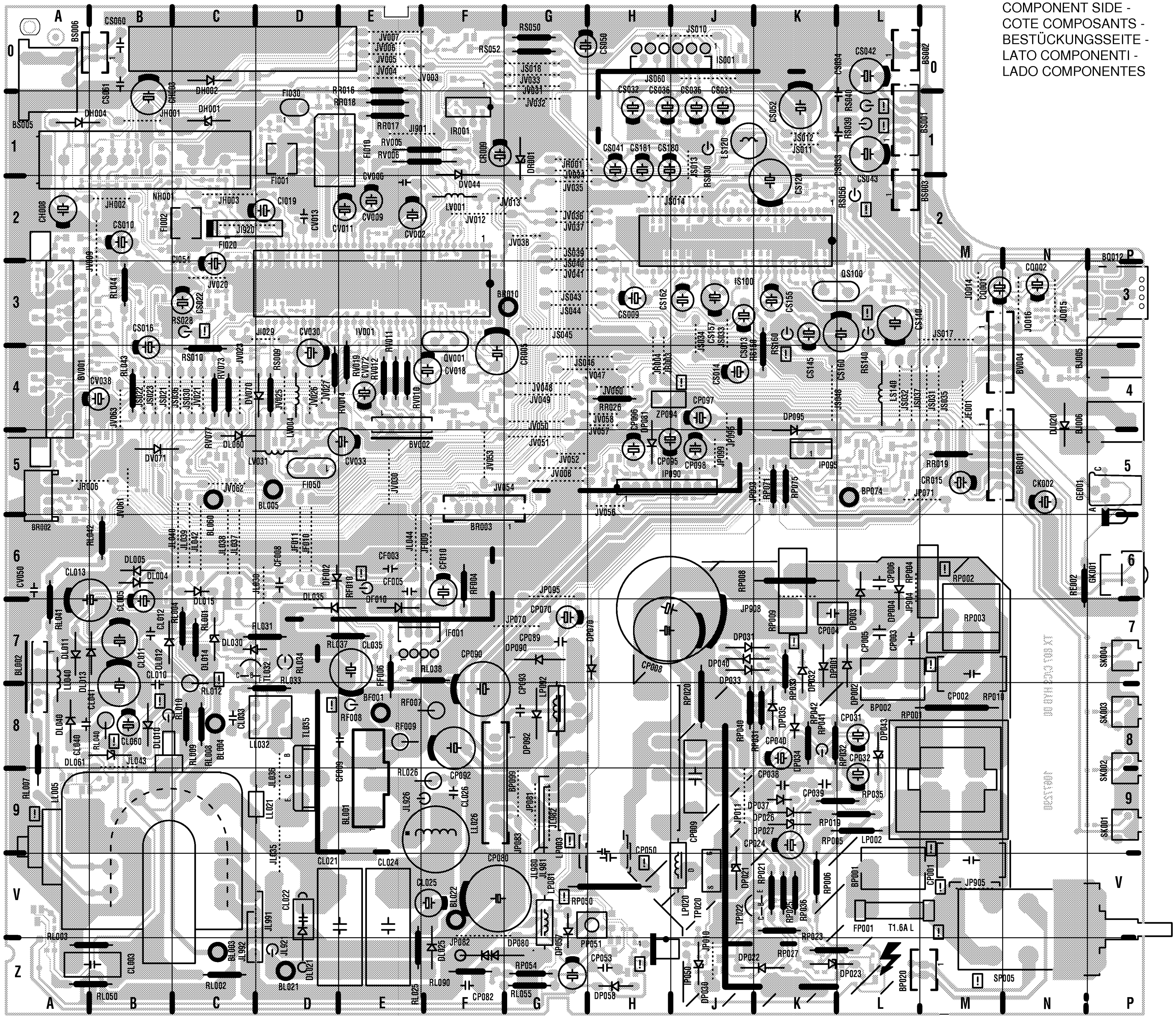

TX807 C/CS

First issue 03 / 00

MAIN BOARD - PLATINE PRINCIPALE - CHASSIS GRUNDPLATTE - PIASTRA PRINCIPALE - PLATINA PRINCIPAL

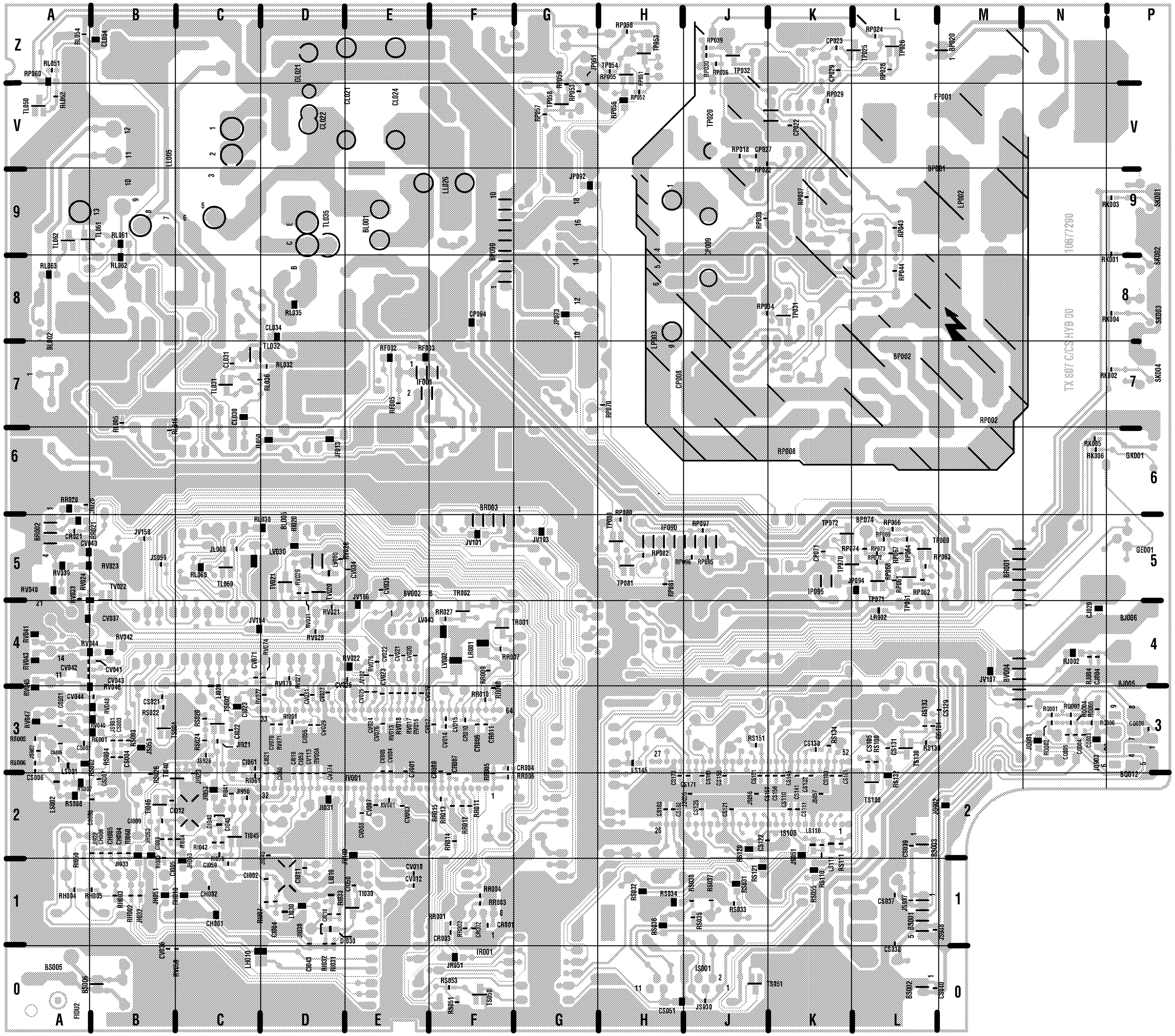

SOLDER SIDE -
CÔTE SOUDURES -
LÖTSEITE -
LATO SALDATURE -
LADO SOLDADURAS

MAIN BOARD - PLATINE PRINCIPALE - CHASSIS GRUNDPLATTE - PIASTRA PRINCIPALE - PLATINA PRINCIPAL

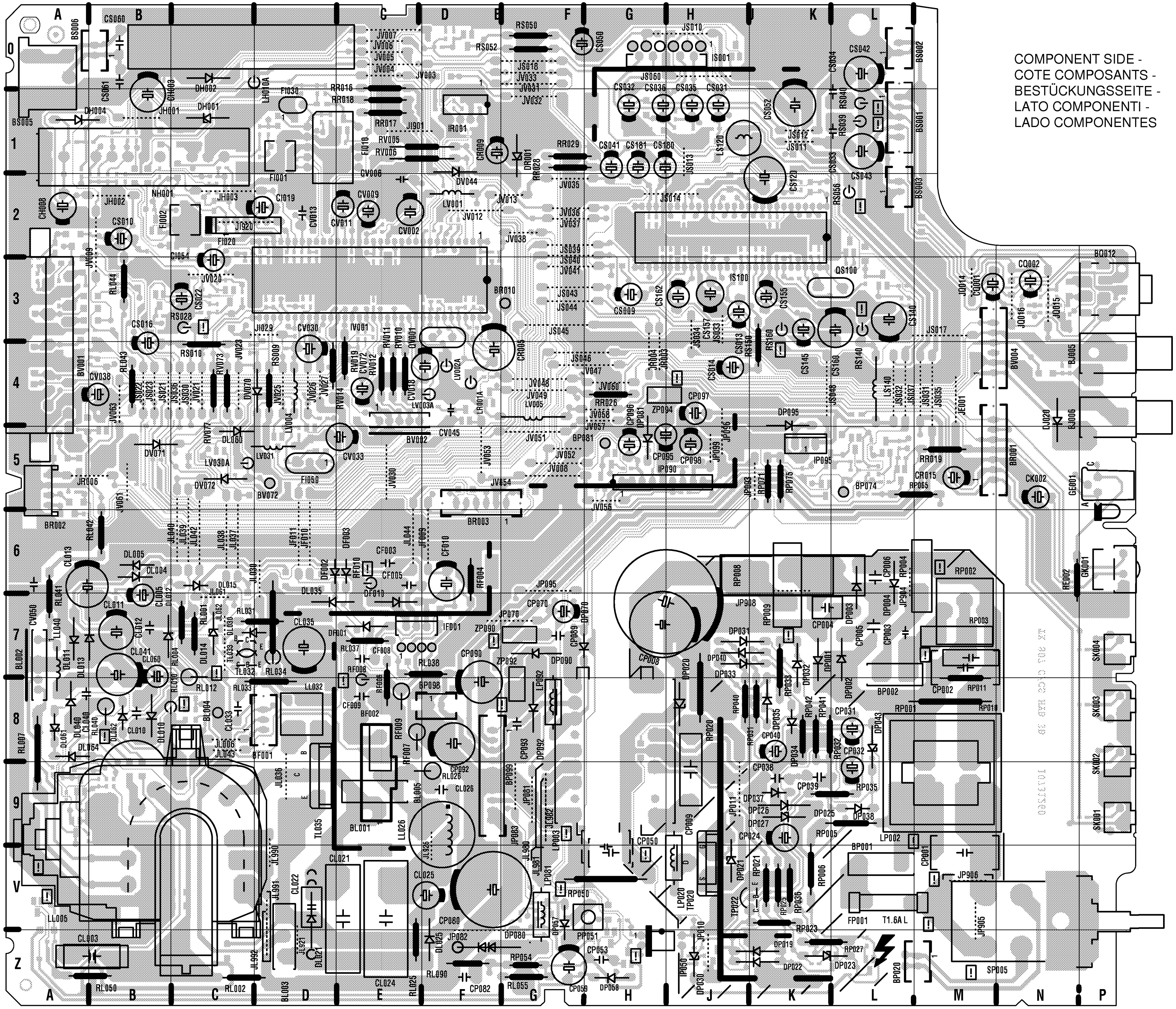

COMPONENT SIDE -
COTE COMPOSANTS -
BESTÜCKUNGSSEITE -
LATO COMPONENTI -
LADO COMPONENTES

TX807C/CS
Updated 10 / 01

MAIN BOARD - PLATINE PRINCIPALE - CHASSIS GRUNDPLATTE - PIASTRA PRINCIPALE - PLATINA PRINCIPAL

SOLDER SIDE -
CÔTE SOUDURES -
LÖTSEITE -
LATO SALDATURE -
LADO SOLDADURAS

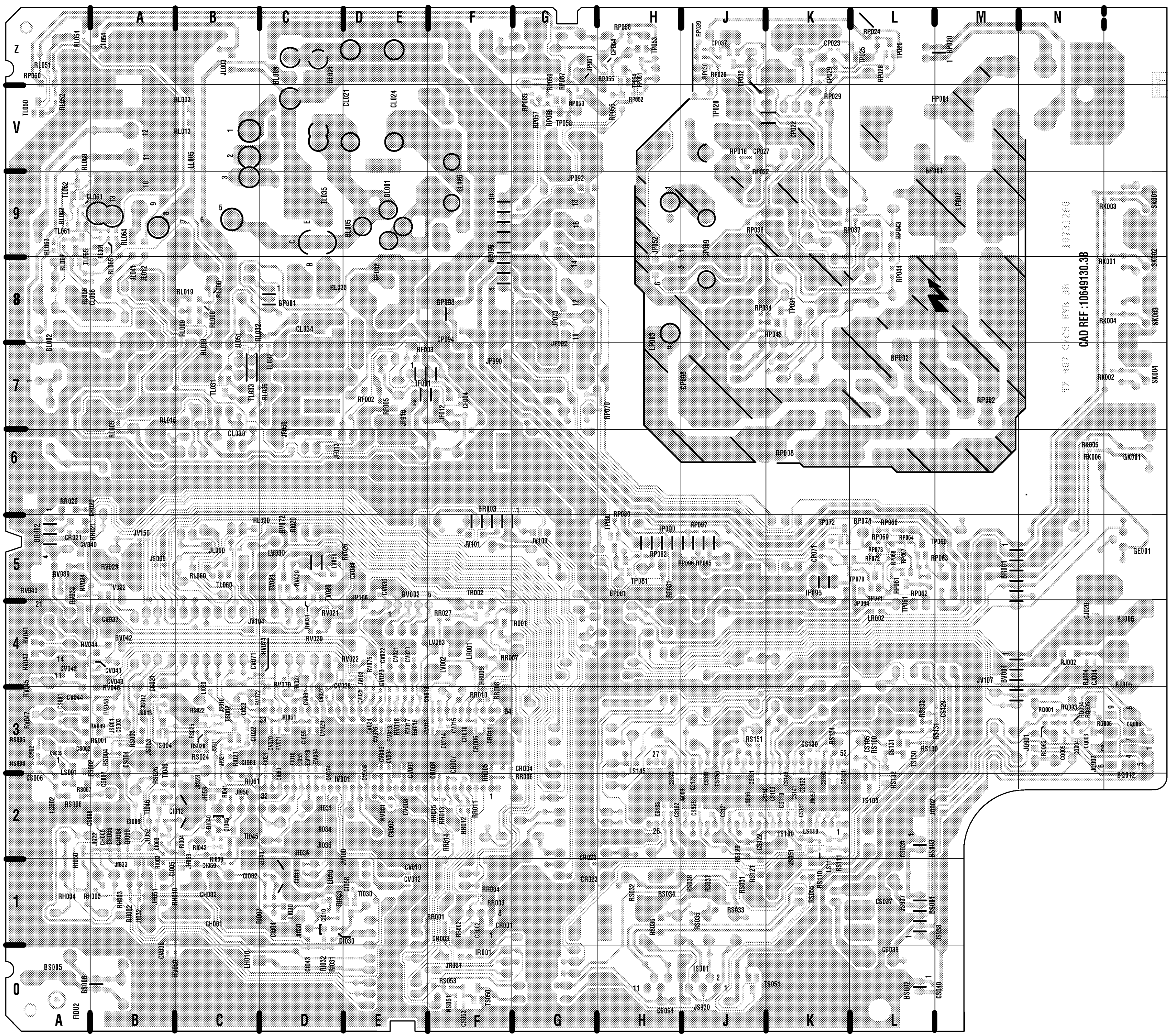

TX807C/CS
Updated 10 / 01

VIDEO AMPLIFIER BOARD - PLATINE AMPLIFICATEURS VIDEO - VIDEOVERSTÄRKERPLATTE - PLATINA AMPLIFICADOR VIDEO - PIASTRA AMPLIFICATORE VIDEO
CRT 80000.00 - CRT 80001.00

COMPONENT SIDE - CÔTE COMPOSANTS - BESTÜCKUNGSSEITE - LATO COMPONENTI - LADO COMPONENTES

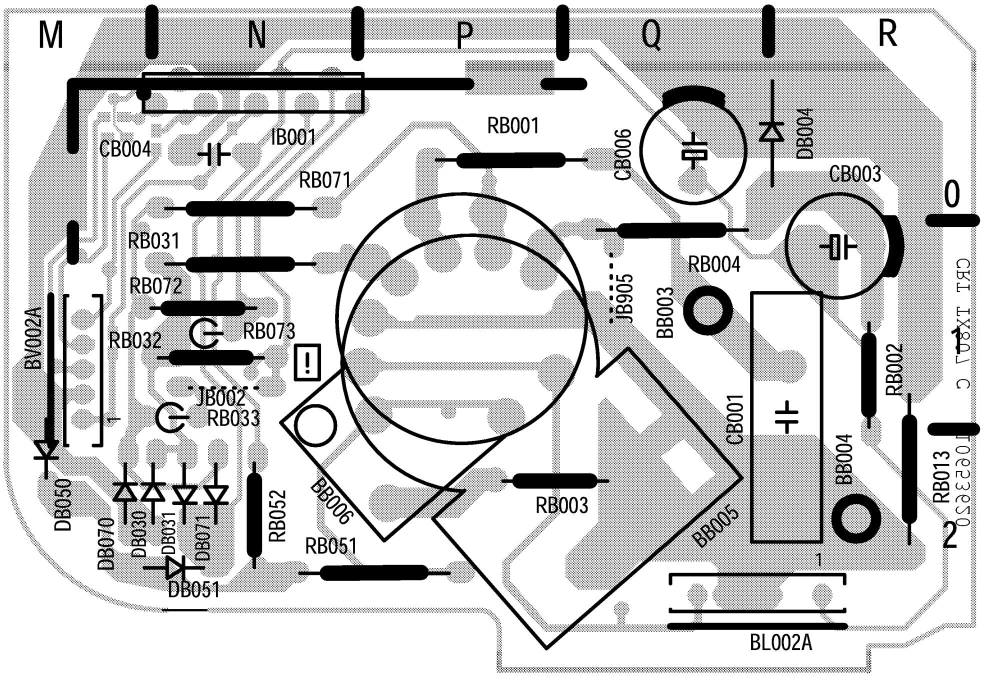

SOLDER SIDE - CÔTE SOUDURES - LÖTSEITE - LATO SALDATURE - LADO SOLDADURAS

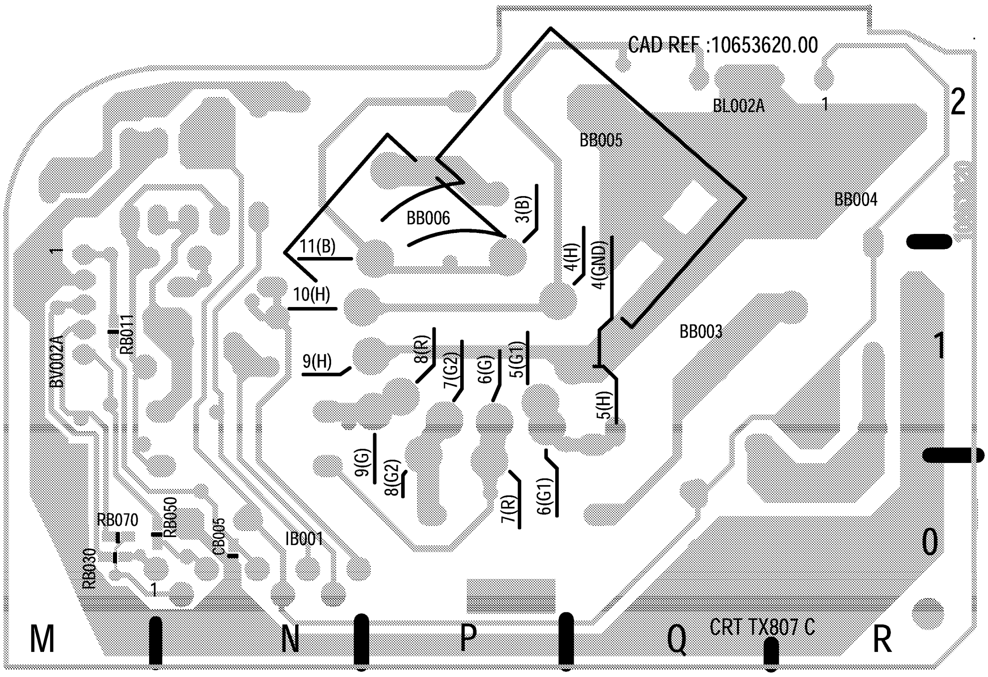

VIDEO AMPLIFIER BOARD - PLATINE AMPLIFICATEURS VIDEO - VIDEOVERSTÄRKERPLATTE - PIASTRA AMPLIFICATORE VIDEO - PLATINA AMPLIFICADOR VIDEO

COMPONENT SIDE - CÔTE COMPOSANTS - BESTÜCKUNGSSEITE - LATO COMPONENTI - LADO COMPONENTES

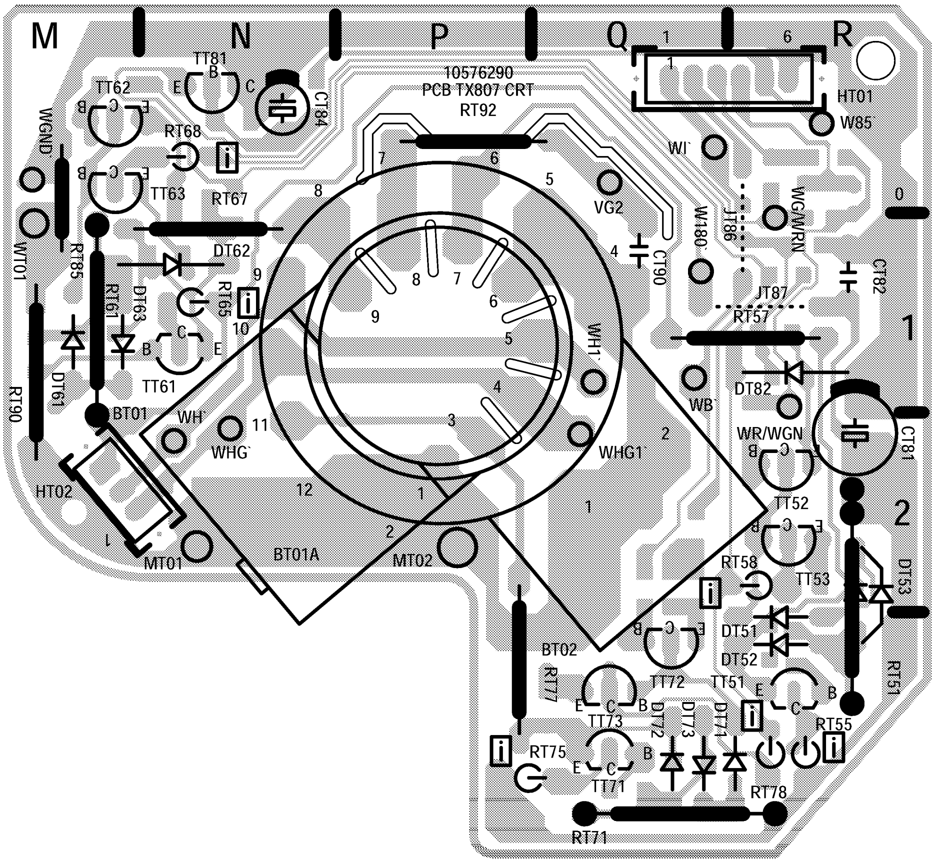

SOLDER SIDE - CÔTE SOUDURES - LÖTSEITE - LATO SALDATURE - LADO SOLDADURAS

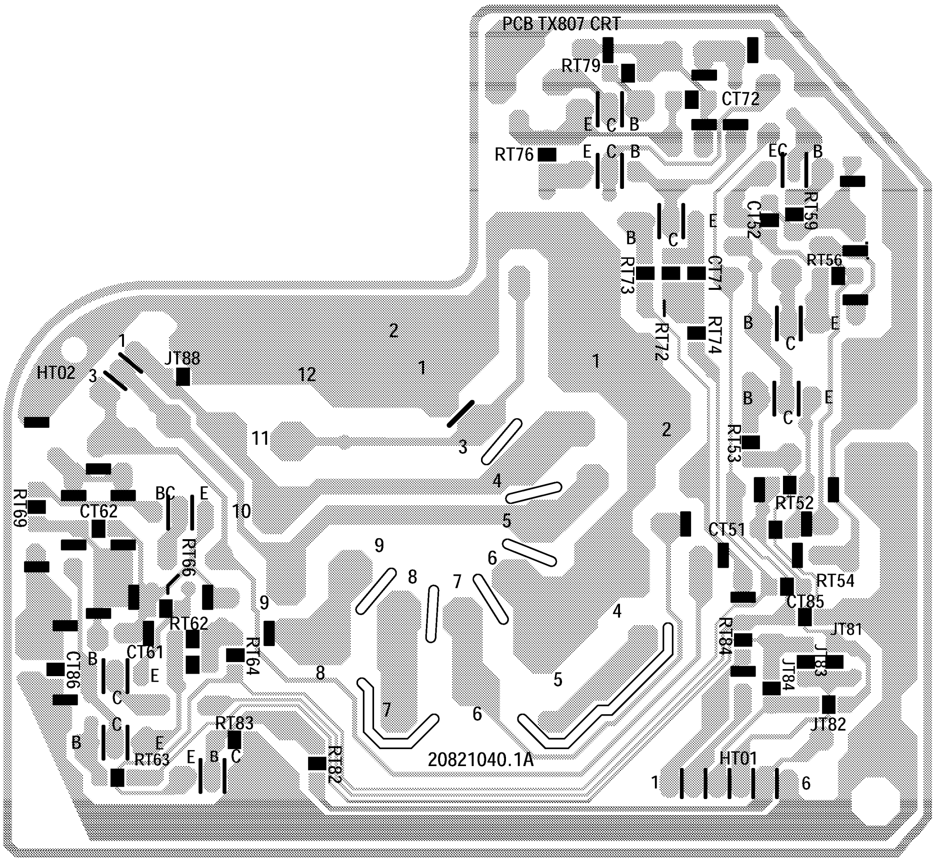

TX807

First issue 02 / 98

TELETEXT MODULE - MODULE TELETEXTE - VIDEOTEXT MODUL
MODULO TELEVIDEO - MODULO TELETEXTO

COMPONENT SIDE - CÖTE COMPOSANTS - BESTÜCKUNGSSEITE -
LATO COMPONENTI - LADO COMPONENTES

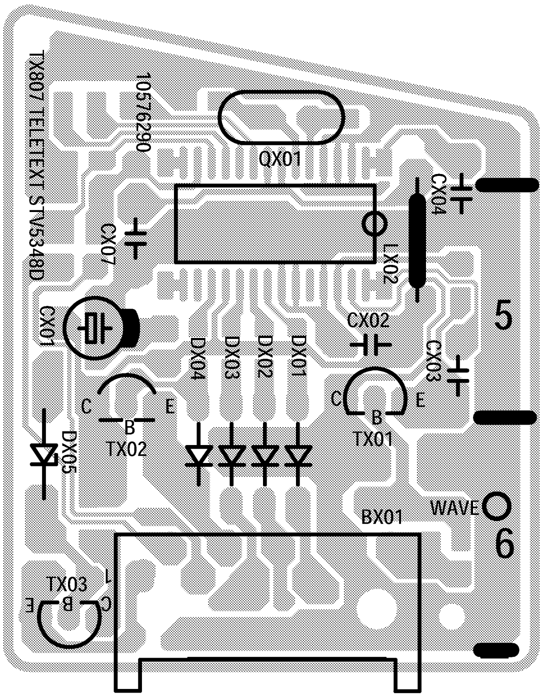

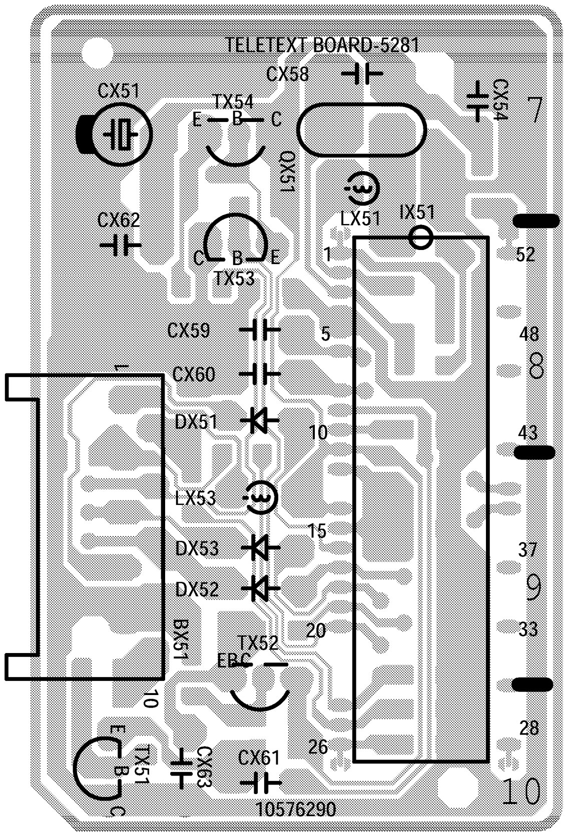
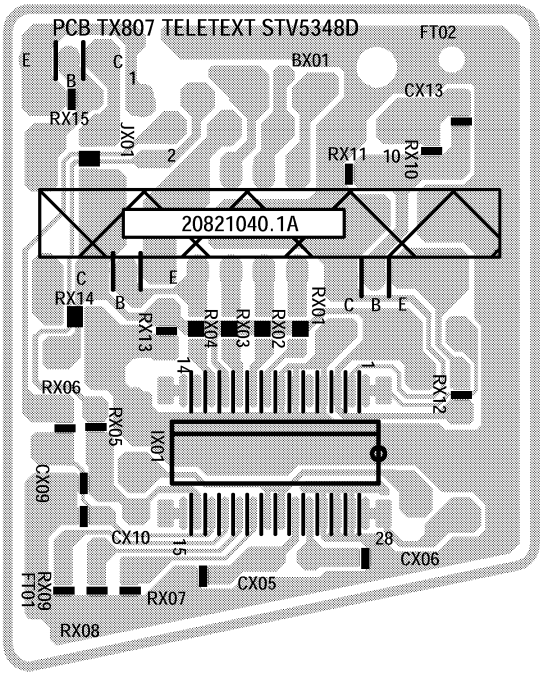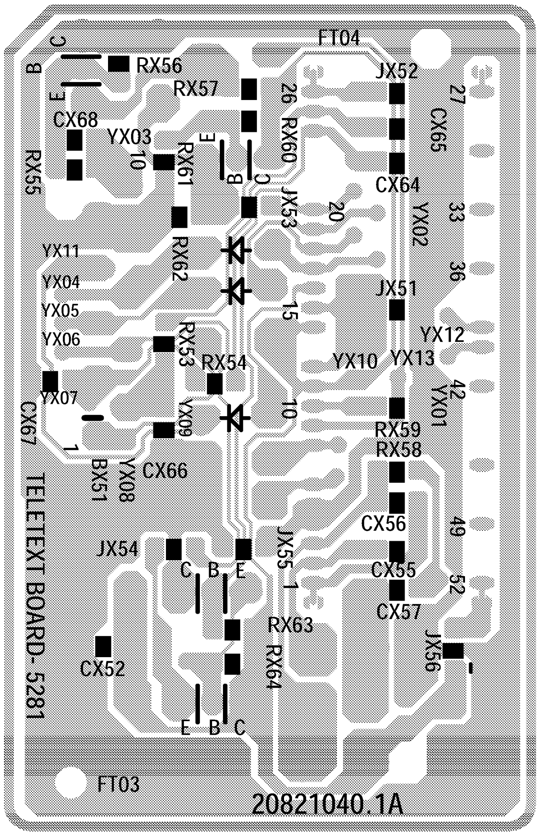
SOLDER SIDE - CÔTE SOUDURES - LÖTSEITE - LATO SALDATURE - LADO SOLDADURAS